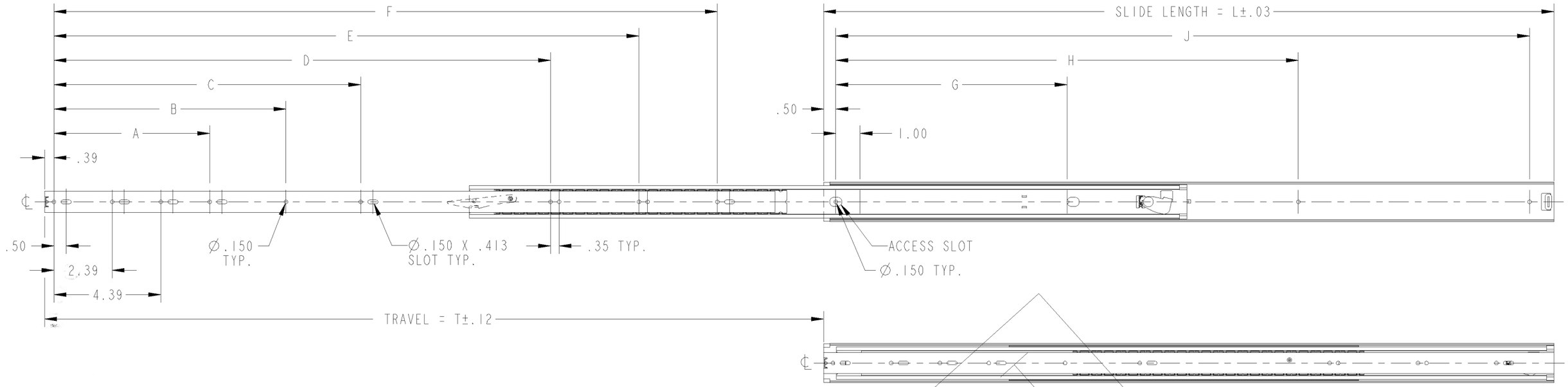

说明：

1. 材质：不锈钢
2. 表面处理：钝化
3. 拉出锁定并且内轨可以快速拆分
4. 未显示孔位可能在滑轨内部
5. 使用6号盘头螺钉安装

DRAFT

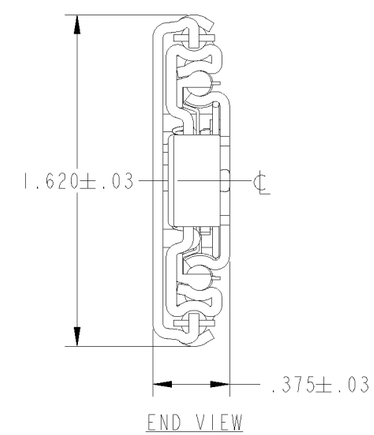

SERIES LENGTH	SLIDE LENGTH	SLIDE TRAVEL	MOUNTING HOLE PATTERN									LOAD RATING
			CABINET SECTION						CHASSIS SECTION			
PART NO.	L	T	A	B	C	D	E	F	G	H	J	
3703158-12	12.00	14.00	-	-	-	-	-	9.25	3.50	7.00	10.50	TBD
3703158-14	14.00	16.00	-	-	-	-	-	11.25	4.00	8.50	12.50	TBD
3703158-16	16.00	18.00	6.40	-	-	-	-	13.25	5.00	9.50	14.50	TBD
3703158-18	18.00	20.00	-	-	6.49	12.38	-	15.25	5.50	11.00	16.50	TBD
3703158-20	20.00	22.00	-	6.78	8.00	14.03	-	17.25	6.00	12.50	18.50	TBD
3703158-22	22.00	24.00	-	-	8.39	16.03	-	19.25	7.00	13.50	20.50	TBD
3703158-24	24.00	26.00	10.00	10.78	-	-	18.03	21.25	7.50	15.00	22.50	TBD
3703158-26	26.00	28.00	5.53	9.15	10.60	16.40	20.03	23.25	8.00	16.50	24.50	TBD
3703158-28	28.00	30.00	7.53	11.15	12.00	18.40	22.03	25.25	9.00	17.50	26.50	TBD
3703158-30	30.00	32.00	-	9.53	12.60	20.40	24.03	27.25	9.50	19.00	28.50	TBD

JONATHAN® Engineered Solutions

Irvine Technology Center
410 Exchange, Suite 200
Irvine, CA 92602
Tel. (714) 665-4400
Fax: (714) 368-7002
Website: www.jonathanengr.com
Engineer - Production - Integration/ Subassembly - Logistics
United States - Mexico - China - Taiwan

TOLERANCES UNLESS OTHERWISE NOTED

.XX	.XXX	ANGLES	HOLES
± .01	± .005	± 1°	± .005

PART NUMBER : 3703158

DATE : 08/23/16

DESCRIPTION : stainless steel 3703158 LOAD RATING:115LBS./52KG

SHEET 1 OF 1

COPYRIGHT © 2012 JONATHAN ENGINEERED SOLUTIONS