Cisco Catalyst 3850 Series Switches

The Digital Transformation: Converged Wired and Wireless Access and Aggregation

The promise of digital for your business is all about innovating more quickly while reducing risk, cost, and complexity. It will be your network that forms the foundation of your business's transformation.

But supporting your digital organization will require your network to move beyond just connectivity to be a platform for insights, automation, and security.

This is the power of the Cisco® Digital Network Architecture (DNA).

Cisco DNA is a monumental shift on how to design and build networks. The Cisco Catalyst® 3850 Series, as part of the Cisco DNA portfolio of next-generation enterprise-class stackable Ethernet and Multigigabit Ethernet access and aggregation layer switches, securely enables time-saving virtualization, greater automation, and valuable analytics data that directly address your evolving business needs, including less cost to install and operate.

The Cisco Catalyst 3850 Series provides capabilities that ideally suited to support the convergence of wired and wireless access. The new Cisco Unified Access Data™ Plane (UADP) application-specific integrated circuit (ASIC) powers the switch and enables uniform wired-wireless policy enforcement, application visibility, flexibility, and application optimization. This convergence is built on the resilience of the new and improved Cisco StackWise®-480 technology.

The Cisco Catalyst 3850 Series Switches support full IEEE 802.3at Power over Ethernet Plus (PoE+), Cisco Universal Power over Ethernet (Cisco UPOE), modular and field-replaceable network modules, RJ45 and fiber-based downlink interfaces, and redundant fans and power supplies.

Product Overview

- Integrated wireless controller capability with:
  - Up to 40G of wireless capacity per switch (48-port RJ45 models)
  - Support for up to 100 access points and 2000 wireless clients on each switching entity (switch or stack)
- 24 and 48 10/100/1000Mbps data PoE+ and Cisco UPOE models with energy-efficient Ethernet (EEE)
- 24 and 48 100Mbps/1/2.5/5/10 Gbps Cisco UPOE models with energy-efficient Ethernet (EEE)
- 12- and 24-port 1 Gigabit Ethernet SFP-based models
- 12- and 24-port 1/10 Gigabit Ethernet SFP+-based models
- 48-port 1/10 Gigabit Ethernet SFP+ model with 4 fixed 40 Gigabit Ethernet QSFP+ uplinks
- Cisco StackWise-480 technology provides scalability and resiliency with 480 Gbps of stack throughput[1]
- Cisco StackPower™ technology provides power stacking among stack members for power redundancy[1]

[1] StackWise and StackPower technologies are not supported on the 48-port SFP+ switch model.

© 2017 Cisco and/or its affiliates. All rights reserved. This document is Cisco Public Information.

- Five optional uplink modules[2] with 4 x Gigabit Ethernet, 2 x 10 Gigabit Ethernet, 4 x 10 Gigabit Ethernet[3], 8 x 10 Gigabit Ethernet4, or 2 x 40 Gigabit Ethernet QSFP+[4] ports
- Dual redundant, modular power supplies and three modular fans providing redundancy
- Full IEEE 802.3at (PoE+) with 30W power on all copper ports in 1 rack unit (RU) form factor
- Cisco UPOE with 60W power per port in 1 rack unit (RU) form factor
- IEEE 802.3bz (2.5/5 G/s BASE-T) to go beyond 1 Gb/s with existing Cat5e and Cat6
- IEEE 802.1ba AV Bridging (AVB) built-in to provide better AV experience for including improved time synchronization and QoS
- Software support for IPv4 and IPv6 routing, multicast routing, modular quality of service (QoS), Flexible NetFlow (FNF), and enhanced security features
- Single universal Cisco IOS® Software image across all license levels, providing an easy upgrade path for software features
- DNA services delivered through Cisco ONE™ Software, providing simplified, high-value solutions with license portability and flexibility
- Support for AES-256 with the powerful MACSEC 256-bit for SFP+ and mGig models and 128-bit encryption algorithm available on all models
- Enhanced limited lifetime warranty (E-LLW) with next business day (NBD) advance hardware replacement and 90-day access to Cisco Technical Assistance Center (TAC) support

Switch Models and Configurations

All switches ship with one of the five power supplies (350WAC, 715WAC, 750WAC, 1100WAC, or 440WDC)[5]. Figures 1 through 3 show the Cisco Catalyst 3850 Series Switches.

Figure 1. Cisco Catalyst 3850 Series Switches

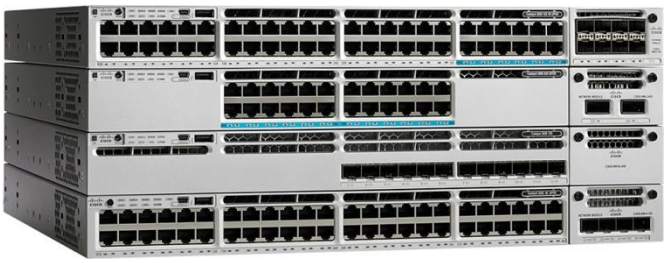

[2] Optional uplink modules are not supported on the 48-port 10G SFP+ switch model.

[3] Compatible only with the 48-port RJ45 models and with the 12-port (or higher) 10 Gigabit capable models.

[4] Compatible only with Cisco Catalyst 3850 Multigigabit and 24-port SFP+ switch models.

[5] The 48-port 10G SFP+ switch model will only support dedicated power supplies with front-to-back and back-to-front configurations.

© 2017 Cisco and/or its affiliates. All rights reserved. This document is Cisco Public Information.

Figure 2. Cisco Catalyst 3850 Switches with 12 and 24 1/10 Gigabit Ethernet SFP+ Ports

Figure 3. Cisco Catalyst 3850 Switches with 12 and 24 1 Gigabit Ethernet SFP Ports

Figure 4. Cisco Catalyst 3850 Switches with 10 Gigabit Ethernet 48 ports

Table 1 shows the Cisco Catalyst 3850 Series configurations.

Table 1. Cisco Catalyst 3850 Series Configurations

Models	Total 10/100/1000 or SFP or SFP+ Ports	Default AC Power Supply	Available PoE Power	StackWise-480	StackPower
WS-C3850-24T	24	350WAC	-	Yes	Yes
WS-C3850-48T	48				
WS-C3850-24P	24 PoE+	715WAC	435W		
WS-C3850-48P	48 PoE+				
WS-C3850-48F	48 PoE+	1100WAC	800W		
WS-C3850-24U	24 UPOE	1100WAC	800W		
WS-C3850-48U	48 UPOE	1100WAC	800W		
WS-C3850-24XU	24 UPOE (100Mbps/1/2.5/5/10 Gbps)	1100WAC	580W		
WS-C3850-12X48U	48 UPOE (with 12 100Mbps/1/2.5/5/10 Gbps Ports)	1100WAC	630W		
WS-C3850-12S	12 SFP	350WAC			
WS-C3850-24S	24 SFP				
WS-C3850-12XS	12 1/10G SFP+	350WAC	-		
WS-C3850-24XS	24 1/10G SFP+	715 WAC	-		
WS-C3850-48XS	48 1/10G SFP+	750WAC (front to back)	-	No	No

© 2017 Cisco and/or its affiliates. All rights reserved. This document is Cisco Public Information.

Network Modules

The Cisco Catalyst 3850 Series Switches support five optional network modules for uplink ports. The default switch configuration does not include the network module[6]. At the time of switch purchase the customer has the flexibility to choose from the network modules described in Table 2.

[6] Network modules are not supported on the 48-port 10G SFP+ switch model, which comes with four fixed 40 Gigabit Ethernet QSFP+ uplinks.

© 2017 Cisco and/or its affiliates. All rights reserved. This document is Cisco Public Information.

Figure 5 shows the following network modules:

- 4 x Gigabit Ethernet with Small Form-Factor Pluggable (SFP) receptacles
- 2 x 10 Gigabit Ethernet with SFP+ or 4 x Gigabit Ethernet with SFP receptacles
- 4 x 10 Gigabit Ethernet with SFP+ receptacles (supported only on the 48-port Gigabit Ethernet models or on the 12-port or higher 10 Gigabit Ethernet models)

Figure 5. Network Modules with Four Gigabit Ethernet, Two 10 Gigabit Ethernet SFP+, or Four 10 Gigabit Ethernet SFP+ Interfaces

Figure 6 shows the following network modules:

- 8 x 10 Gigabit Ethernet with Small Form-Factor Pluggable+ (SFP+) receptacles
- 2 x 40 Gigabit Ethernet with Quad Small Form-Factor Pluggable+ (QSFP+) receptacles

Figure 6. Network Modules with Two 40 Gigabit Ethernet QSFP+ or Eight 10 Gigabit Ethernet SFP+ Interfaces

Table 2. Network Module Numbers and Descriptions

Product Number	Product Description	WS-C3850-24XU WS-C3850-12X48U	WS-C3850-12XS WS-C3850-24XS
C3850-NM-4-1G	4 x Gigabit Ethernet network modules	Supported	Not supported
C3850-NM-2-10G	4 x Gigabit Ethernet/2 x 10 Gigabit Ethernet network modules	Supported	Not supported
C3850-NM-4-10G	4 x Gigabit Ethernet/4 x 10 Gigabit Ethernet network modules	Supported	Supported
C3850-NM-8-10G	8 x Gigabit Ethernet/8 x 10 Gigabit Ethernet network modules	Supported	See note
C3850-NM-2-40G	2 x 40 Gigabit Ethernet network modules	Supported	See note

Note: The C3850-NM-4-10G module is supported only on the 48-port Gigabit Ethernet models or on the 12-port or higher 10 Gigabit Ethernet models. The C3850-NM-8x10G and C3850-NM-2x40G modules are supported on the 24-port and 48-port multigigabit switches and also on the 24-port 10G SFP+ switch model. The C3850-NM-4-1G and C3850-NM-2-10G modules are not supported on the 12-port and 24-port SFP+ models.

© 2017 Cisco and/or its affiliates. All rights reserved. This document is Cisco Public Information.

Table 3. Network Module Compatibility Matrix

Models	Network Modules
WS-C3850-24T	C3850-NM-4-1G, C3850-NM-2-10G
WS-C3850-48T	C3850-NM-4-1G, C3850-NM-2-10G, C3850-NM-4-10G
WS-C3850-24P	C3850-NM-4-1G, C3850-NM-2-10G
WS-C3850-48P	C3850-NM-4-1G, C3850-NM-2-10G, C3850-NM-4-10G
WS-C3850-48F	C3850-NM-4-1G, C3850-NM-2-10G, C3850-NM-4-10G
WS-C3850-24U	C3850-NM-4-1G, C3850-NM-2-10G
WS-C3850-48U	C3850-NM-4-1G, C3850-NM-2-10G, C3850-NM-4-10G
WS-C3850-24XU	C3850-NM-4-1G, C3850-NM-2-10G, C3850-NM-4-10G, C3850-NM-8-10G, C3850-NM-2-40G
WS-C3850-12X48U	C3850-NM-4-1G, C3850-NM-2-10G, C3850-NM-4-10G, C3850-NM-8-10G, C3850-NM-2-40G
WS-C3850-12S	C3850-NM-4-1G, C3850-NM-2-10G
WS-C3850-24S	C3850-NM-4-1G, C3850-NM-2-10G
WS-C3850-12XS	C3850-NM-4-10G
WS-C3850-24XS	C3850-NM-4-10G, C3850-NM-8-10G, C3850-NM-2-40G
WS-C3850-48XS	None

An SFP+ receptacle supports both 10 Gigabit Ethernet and Gigabit Ethernet modules, allowing customers to use their investment in Gigabit Ethernet SFP modules and upgrade to 10 Gigabit Ethernet when business demands change without having to do a comprehensive upgrade of the access switch. In contrast, SFP receptacles can be used only as Gigabit Ethernet ports, as shown in the examples in Table 4.

Table 4. Network Module Configuration Examples

	Interface Options	
Network Module	**10 Gigabit Ethernet SFP+ Ports**	**Gigabit Ethernet SFP Ports**
4 x Gigabit Ethernet	0	4
4 x Gigabit Ethernet/2 x10 Gigabit Ethernet network modules	2	0
	1	3
	2	2
	0	4
4 x Gigabit Ethernet/4 x10 Gigabit Ethernet network modules	4	0
	0	4
	2	2
	3	1
	1	3

Dual Redundant Modular Power Supplies

The Cisco Catalyst 3850 Series Switches support dual redundant power supplies[7]. The switch ships with one power supply by default, and the second power supply can be purchased at the time of ordering the switch or at a later time. If only one power supply is installed, it should always be in power supply bay 1. The switch also ships with three field-replaceable fans. (See Figure 7.)

[7] The 48-port 10G SFP+ switch model will only support dedicated power supplies with front-to-back and back-to-front configurations.

© 2017 Cisco and/or its affiliates. All rights reserved. This document is Cisco Public Information.

Figure 7. Dual Redundant Power Supplies

Table 5 shows the different power supplies available in these switches and available PoE power.

Table 5. Power Supply Models

Models	Default Power Supply	Available PoE Power
24-port data switch	PWR-C1-350WAC	-
48-port data switch		
24-port PoE switch	PWR-C1-715WAC	435W
48-port PoE switch		
48-port full PoE switch	PWR-C1-1100WAC	800W
24-port UPOE switch	PWR-C1-1100WAC	800W
48-port UPOE switch		
24-port Multigigabit UPOE switch	PWR-C1-1100WAC	580W
48-port Multigigabit UPOE switch	PWR-C1-1100WAC	630W
12-port SFP switch	PWR-C1-350WAC	-
24-port SFP switch		
12-port SFP+ switch	PWR-C1-350WAC	-
24-port SFP+ switch	PWR-C1-715WAC	-
48-port SFP+ switch (WS-C3850-48XS-S and WS-C3850-48XS-E)	PWR-C3-750WAC-R	-
48-port SFP+ switch (WS-C3850-48XS-F-S and WS-C3850-48XS-F-E)	PWR-C3-750WAC-F	-

In addition to the power supplies listed in Table 5, a 440WDC power supply is available as a configuration option and also as a spare (that is, it can be ordered separately) on all switch models. The DC power supply also delivers PoE capabilities for maximum flexibility (refer to Table 6 for available PoE budget with DC power supplies). Customers can mix and match the AC and DC power supplies in the two available power supply slots. Any of these power supplies can be installed in any of the switches.

Table 6. Available PoE with DC Power Supply

Model	Number of 440WDC Power Supplies	Total Available PoE Budget
24-port PoE switch	1	220W
	2	660W
48-port PoE switch	1	185W
	2	625W
24-port Mgig UPoE switch	2	360W
48-port Mgig UPoE switch	2	410W

© 2017 Cisco and/or its affiliates. All rights reserved. This document is Cisco Public Information.

Power over Ethernet Plus (PoE+)

In addition to PoE (IEEE 802.3af), the Cisco Catalyst 3850 Series Switches support PoE+ (IEEE 802.3at standard), which provides up to 30W of power per port. The Cisco Catalyst 3850 Series Switches can provide a lower total cost of ownership (TCO) for deployments that incorporate Cisco IP phones, Cisco Aironet® wireless LAN (WLAN) access points, or any IEEE 802.3at-compliant end device. PoE removes the need for wall power to each PoE-enabled device and eliminates the cost for additional electrical cabling and circuits that would otherwise be necessary in IP phone and WLAN deployments. Table 7 shows the power supply combinations required for different PoE needs.

Table 7. Power Supply Requirements for PoE and PoE+

	24-Port PoE Switch	48-Port PoE Switch
PoE on all ports (15.4W per port)	One PWR-C1-715WAC	One PWR-C1-1100WAC or two PWR-C1-715WAC
PoE+ on all ports (30W per port)	One PWR-C1-1100WAC or two PWR-C1-715WAC	Two PWR-C1-1100WAC or one PWR-C1-1100WAC and one PWR-C1-715WAC

Cisco Universal Power over Ethernet (UPOE)

Cisco Universal Power over Ethernet (Table 8) is a breakthrough technology, offering the following services and benefits.

- 60W per port to enable a variety of end devices such as Samsung VDI client, BT IP turret systems in trading floors, Cisco Catalyst compact switches in retail/hospitality environments, personal Cisco TelePresence® systems, and physical access control devices
- High availability for power and guaranteed uninterrupted services, a requirement for critical applications (e911)
- Lowering OpEx by providing network resiliency at lower cost by consolidating backup power into the wiring closet
- Faster deployment of new campus access networking infrastructures by eliminating the need for a power outlet for every endpoint

Table 8. Power Supply Requirements for UPOE

	24-Port UPOE Switch	48-Port UPOE Switch	24-Port Multigigabit UPOE Switch	48-Port Multigigabit UPOE Switch
UPOE (60W per port) on all (24 port switch) or max. 30 ports (48 port switch)	One PWR-C1-1100WAC and one PWR-C1-715WAC	Two PWR-C1-1100WAC	Two PWR-C1-1100WAC	Two PWR-C1-1100WAC

Cisco Catalyst Multigigabit Ethernet Technology

Cisco Multigigabit Ethernet is a unique Cisco innovation to the new Cisco Catalyst Ethernet Access Switches. With the enormous growth of 802.11ac and new wireless applications, wireless devices are promoting the demand for more network bandwidth. This creates a need for a technology that supports speeds higher than 1 Gbps on all cabling infrastructure. Cisco Multigigabit technology allows you to achieve bandwidth speeds from 1 Gbps through 10 Gbps over traditional Cat 5e cabling or above. In addition, the Multigigabit ports on select Cisco Catalyst switches support UPOE, which is increasingly important for next-generation workspaces and Internet of Things (IoT) ecosystems.

© 2017 Cisco and/or its affiliates. All rights reserved. This document is Cisco Public Information.

Cisco Multigigabit technology offers significant benefits for a diverse range of speeds, cable types, and PoE power. The benefits can be grouped into three different areas:

- **Multiple speeds:** Cisco Multigigabit technology supports autonegotiation of multiple speeds on switch ports. The supported speeds are 100 Mbps, 1 Gbps, 2.5 Gbps, and 5 Gbps on Cat 5e cable and up to 10 Gbps over Cat 6a cabling.
- **Cable type:** The technology supports a wide range of cable types, including Cat 5e, Cat 6, and Cat 6a or above.
- **PoE power:** The technology supports PoE, PoE+, and UPOE for all the supported speeds and cable types.

For more information, visit http://www.cisco.com/c/en/us/solutions/enterprise-networks/catalyst-multigigabit-switching/index.html.

Benefits

Converged Wired plus Wireless Access

The Cisco Catalyst 3850 is the first stackable access switching platform that enables wired plus wireless services on a single Cisco IOS XE Software-based platform. With this, Cisco has pioneered a host of rich capabilities such as high availability based on stateful switchover (SSO) on stacking, granular QoS, security, and Flexible Netflow (FNF) across wired and wireless in a seamless fashion. Also, the wired plus wireless features are bundled into a single Cisco IOS Software image, which reduces the number of software images that users have to qualify/certify before enabling them in their network. The single console port for command-line interface (CLI) management reduces the number of touch points to manage for wired plus wireless services, thereby reducing network complexity, simplifying network operations, and lowering the TCO to manage the infrastructure.

Converged wired plus wireless not only improves wireless bandwidth across the network but also the scale of wireless deployment. Each 48-port Cisco Catalyst 3850 provides 40 Gbps of wireless throughput (20 Gbps on the 24-port/12-port models). This wireless capacity increases with the number of members in the stack. This makes sure that the network can scale with current wireless bandwidth requirements, as dictated by IEEE 802.11n-based access points and with future wireless standards such as IEEE 802.11ac. Additionally, the Cisco Catalyst 3850 distributes the wireless controller functions to achieve better scalability. Each Cisco Catalyst 3850 switch/stack can operate as the wireless controller in two modes (Figure 8):

- **Mobility agent (MA):** This is the default mode in which a Cisco Catalyst 3850 switch ships. In this mode the switch is capable of terminating the CAPWAP tunnels from the access points and providing wireless connectivity to wireless clients. Maintaining wireless client databases and configuring and enforcing security and QoS policies for wireless clients and access points can be enforced in this mode. No additional license on top of IP Base is required to operate in the mobility agent mode.
- **Mobility controller (MC):** In this mode, the Cisco Catalyst 3850 switch can perform all the mobility agent tasks in addition to mobility coordination, radio resource management (RRM), and Cisco CleanAir® coordination within a mobility subdomain. The mobility controller mode can be enabled on the switch CLI. IP Base license level is required when the Cisco Catalyst 3850 switch is acting as the mobility controller. A centrally located Cisco 5508 Wireless LAN Controller (WLC 5508), Cisco Wireless Services Module 2 (WiSM2) (when running AireOS Version 7.3), and Wireless LAN Controller 5760 can also perform this role for larger deployments.

© 2017 Cisco and/or its affiliates. All rights reserved. This document is Cisco Public Information.

With mobility agents located in the wiring closets providing 40 Gbps of wireless per 48-port Gigabit Ethernet RJ45 switch (**n** x 40 Gbps for a stack of **n** switches) and mobility controllers managing some of the central wireless functions, the converged access-based wireless deployment provides best-in-class scalability for wireless and significantly improved wireless throughput.

Figure 8. Mobility Controller (MC) and Mobility Agent (MA)

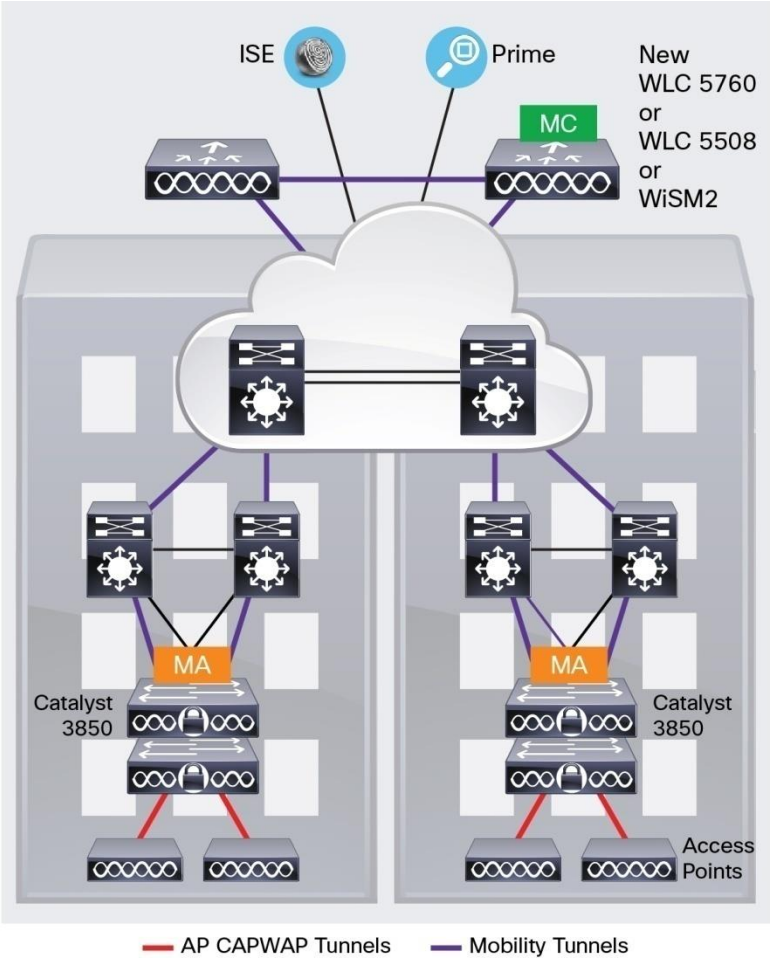

For more information about Converged Wired plus Wireless Access, refer to the Q&A document here: http://www.cisco.com/c/dam/en/us/products/collateral/switches/catalyst-3850-series-switches/cisco-catalyst-3850-series-switches-faq.pdf.

Distributed Intelligent Services

Flexible NetFlow (FNF)

Full visibility into the wired plus wireless traffic is achieved because of the access point Control and Provisioning of Wireless Access Points (CAPWAP) tunnel termination on the switch. This helps identify users and user traffic flows in order to identify potential attackers and take corrective action at the access layer before the attack penetrates further into the network. This is achieved using FNF, which monitors every single flow entering and exiting the switch stack for wired and wireless users. It also helps identify the top wired/wireless talkers and enforce appropriate bandwidth provisioning policies.

© 2017 Cisco and/or its affiliates. All rights reserved. This document is Cisco Public Information.

QoS

The Cisco Catalyst 3850 switch has advanced wired plus wireless QoS capabilities. It uses the Cisco modular QoS command line interface (MQC). The switch manages wireless bandwidth using unprecedented hierarchical bandwidth management starting at the per-access-point level and drilling further down to per-radio, per-service set identification (SSID), and per-user levels. This helps manage and prioritize available bandwidth between various radios and various SSIDs (enterprise, guest, and so on) within each radio on a percentage basis. The switch is also capable of automatically allocating equal bandwidth among the connected users within a given SSID. This makes sure that all users within a given SSID get a fair share of the available bandwidth while being connected to the network. The UADP ASIC enables the hierarchical bandwidth management and fair sharing of bandwidth, thereby providing hardware-based QoS for optimized performance at line-rate traffic.

In addition to these capabilities, the switch is able to do class of service (CoS) or differentiated services code point (DSCP) based queuing, policing, shaping, and marking of wired plus wireless traffic. This enables users to create common policies that can be used across wired plus wireless traffic. The Cisco Catalyst 3850 also supports downloadable policy names from the Cisco Identity Services Engine (ISE) when a user successfully authenticates to the network using the ISE.

Security

The Cisco Catalyst 3850 provides a rich set of security features for wired plus wireless users. Features such as IEEE 802.1x, port security, Dynamic Host Configuration Protocol (DHCP) Snooping and Guard, Dynamic ARP Inspection, RA Guard, IP Source Guard, control plane protection (CoPP), wireless intrusion prevention systems (WIPSs), and so on enable protection against unauthorized users and attackers. With a variety of wired plus wireless users connecting to the network, the switch supports session-aware networking, in which each device connected to the network is identified as one session, and unique access control lists (ACLs) and/or QoS policies can be defined and applied using the ISE for each of these sessions, providing better control on the devices connecting to the network.

AES-256 MACsec encryption is the IEEE 802.1AE standard for authenticating and encrypting packets between switches and endpoints. The Cisco Catalyst 3850 Series switches support 256-bit (SFP+ and mGig models only) and 128-bit Advanced Encryption Standard (AES) on all ports at all speeds, providing the most secure link encryption.

Resiliency

Cisco StackWise-480 Technology

Cisco StackWise-480 technology is built on the highly successful industry-leading StackWise® technology, which is a premium stacking architecture[8]. StackWise-480 has a stack bandwidth of 480 Gbps. StackWise - 480 uses Cisco IOS Software SSO for providing resiliency within the stack. The stack behaves as a single switching unit that is managed by an “active” switch elected by the member switches.

The active switch automatically elects a standby switch within the stack. The active switch creates and updates all the switching/routing/wireless information and constantly synchronizes that information with the standby switch. If the active switch fails, the standby switch assumes the role of the active switch and continues to the keep the stack operational. Access points continue to remain connected during an active-to-standby switchover.

[8] StackWise and StackPower technologies are not supported on the 48-port SFP+ switch model.

© 2017 Cisco and/or its affiliates. All rights reserved. This document is Cisco Public Information.

A working stack can accept new members or delete old ones without service interruption. StackWise-480 creates a highly resilient single unified system of up to nine switches, providing simplified management using a single IP address, single Telnet session, single CLI, autoversion checking, autoupgrading, autoconfiguration, and more. StackWise-480 also enables local switching in Cisco Catalyst 3850 Series Switches.

Cisco StackPower Technology

The Cisco Catalyst 3850 Series uses the Cisco StackPower[9] technology present on the Cisco Catalyst 3850 Series. StackPower is an innovative power interconnect system that allows the power supplies in a stack to be shared as a common resource among all the switches. Cisco StackPower unifies the individual power supplies installed in the switches and creates a pool of power, directing that power where it is needed. Up to four switches[10] can be configured in a StackPower stack with the special connector at the back of the switch using the StackPower cable, which is different than the StackWise-480 cables. (See Figure 9.)

Figure 9. StackWise-480 and StackPower Connectors

StackPower can be deployed in either power-sharing mode or redundancy mode. In power-sharing mode, the power of all the power supplies in the stack is aggregated and distributed among the switches in the stack. In redundant mode, when the total power budget of the stack is calculated, the wattage of the largest power supply is not included. That power is held in reserve and used to maintain power to switches and attached devices when one power supply fails, enabling the network to operate without interruption. Following the failure of one power supply, the StackPower mode becomes power sharing.

StackPower allows customers to simply add one extra power supply in any switch of the stack and either provide power redundancy for any of the stack members or simply add more power to the shared pool. StackPower eliminates the need for an external redundant power system or installation of dual power supplies in all the stack members. StackPower is available in LAN Base license level (or higher). For LAN Base, cables need to be purchased separately.

Foundation for Open Network Environment

The heart of the Cisco Catalyst 3850 is the UADP ASIC with programmability for future features and intelligence with investment protection. The new ASIC provides the foundation for converged APIs across wired and wireless,

[9] Stackpower is not supported on the 48-port 10G SFP+ switch model.
[10] Up to nine switches are supported in a star configuration with XPS-2200.

© 2017 Cisco and/or its affiliates. All rights reserved. This document is Cisco Public Information.

Cisco Open Network Environment, software-defined networking (SDN) readiness and OnePK SDK through software updates over the product lifetime.

Software Features and Services on Cisco Catalyst 3850 Series Switches

Software services supported on the Cisco Catalyst 3850 Series Switches can be classified into five broad categories:

- Ease of operations
- Advanced security features
- Resiliency
- Application visibility and control
- Audio Video Bridging

Ease of Operations

The Cisco Catalyst 3850 helps reduce the operating costs through:

- Cisco Catalyst Smart Operations
- Easy-to-use deployment and control features
- Efficient switch operations
- Network management tools

Cisco Catalyst Smart Operations

Cisco Catalyst Smart Operations are a comprehensive set of capabilities that simplify LAN deployment, configuration, and troubleshooting. In addition to adaptive, always-on technologies such as StackWise-480 and StackPower, Cisco Catalyst Smart Operations enable zero-touch installation and replacement of switches, fast upgrade, and ease of troubleshooting with reduced operational cost. Cisco Catalyst Smart Operations are a set of features that includes Smart Install, Auto Smartports, Smart Configuration and Smart Troubleshooting to enhance operational excellence:

- Cisco Smart Install is a transparent plug-and-play technology to configure the Cisco IOS Software image and switch configuration without user intervention. Smart Install utilizes dynamic IP address allocation and the assistance of other switches to facilitate installation, providing transparent network plug and play.
- Cisco Auto Smartports provide automatic configuration as devices connect to the switch port, allowing autodetection and plug and play of the device onto the network.
- Cisco Smart Troubleshooting is an extensive array of debug diagnostic commands and system health checks within the switch, including Generic Online Diagnostics (GOLD) and Onboard Failure Logging (OBFL).
- Embedded Event Manager (EEM) is a powerful and flexible feature that provides real-time network event detection and onboard automation. Using EEM, customers can adapt the behavior of their network devices to align with their business needs. This feature requires the IP Base feature set.

Easy-to-Use Deployment and Control Features

- User experience:

© 2017 Cisco and/or its affiliates. All rights reserved. This document is Cisco Public Information.

- IP service-level agreements (SLAs) enable customers to assure new business-critical IP applications, as well as IP services that utilize data, voice, and video, in an IP network. This feature requires the IP Services feature set.
- DHCP autoconfiguration of multiple switches through a boot server eases switch deployment.
- Automatic QoS (AutoQoS) simplifies QoS configuration in voice over IP (VoIP) networks by issuing interface and global switch commands to detect Cisco IP phones, classify traffic, and help enable egress queue configuration.
- Autonegotiation on all ports automatically selects half- or full-duplex transmission mode to optimize bandwidth.
- Automatic media-dependent interface crossover (MDIX) automatically adjusts transmit and receive pairs if an incorrect cable type (crossover or straight through) is installed.
- AV Bridging provides reliable time synchronized transmission with no pops or clicks or video dropouts.

- Simplified configuration and connectivity:
  - Dynamic Trunking Protocol (DTP) facilitates dynamic trunk configuration across all switch ports.
  - Port Aggregation Protocol (PAgP) automates the creation of Cisco Fast EtherChannel groups or Gigabit EtherChannel groups to link to another switch, router, or server.
  - Link Aggregation Control Protocol (LACP) allows the creation of Ethernet channeling with devices that conform to IEEE 802.3ad. This feature is similar to Cisco EtherChannel technology and PAgP.
  - Unidirectional Link Detection Protocol (UDLD) and aggressive UDLD allow unidirectional links caused by incorrect fiber-optic wiring or port faults to be detected and disabled on fiber-optic interfaces.
  - Cisco VLAN Trunking Protocol (VTP) Version 3 supports dynamic VLANs and dynamic trunk configuration across all switches.
  - AV Bridging provides reliable A/V streaming without the need for the installer to perform extensive hand tuning of the network.
- Efficient switch operation:
  - Switching database manager (SDM) templates, VLAN template (specific to LAN Base license level), and advanced template allow the administrator to automatically optimize the ternary content-addressable memory (TCAM) allocation to the desired features based on deployment-specific requirements.
  - Local proxy Address Resolution Protocol (ARP) works in conjunction with private VLAN edge to minimize broadcasts and maximize available bandwidth.
  - Stacking master configuration management with Cisco StackWise-480 technology helps make sure that all switches are automatically upgraded when the master switch receives a new software version. Automatic software version checking and updating help ensure that all stack members have the same software version.
  - Trivial File Transfer Protocol (TFTP) reduces the cost of administering software upgrades by downloading from a centralized location.
  - Network Timing Protocol (NTP) provides an accurate and consistent timestamp to all intranet switches.
- Multicast:
  - Optimized multicast for wired plus wireless: Cisco Catalyst 3850 offers greater multicast efficiency by receiving only one multicast stream and replicating it for all connected wired plus wireless devices connected to that switch.

© 2017 Cisco and/or its affiliates. All rights reserved. This document is Cisco Public Information.

- Internet Group Management Protocol (IGMP) v1, v2, v3 snooping for IPv4: multicast listener discovery (MLD) v1 and v2 snooping provides fast client joins and leaves of multicast streams and limits bandwidth-intensive video traffic to only the requestors.

© 2017 Cisco and/or its affiliates. All rights reserved. This document is Cisco Public Information.

- Monitoring:
  - Remote Switch Port Analyzer (RSPAN) allows administrators to remotely monitor ports in a Layer 2 switch network from any other switch in the same network.
  - For enhanced traffic management, monitoring, and analysis, the Embedded Remote Monitoring (RMON) software agent supports four RMON groups (history, statistics, alarms, and events).
  - Layer 2 traceroute eases troubleshooting by identifying the physical path that a packet takes from source to destination.
  - Wireless RF management provides both real-time and historical information about RF interference affecting network performance across controllers using systemwide Cisco CleanAir technology integration.

Efficient Switch Operation

Cisco Catalyst 3850 Series Switches, designed and engineered by Cisco, provide optimum power-saving, EEE (on RJ45 ports), low-power operations for industry best-in-class power management and power consumption capabilities. The Cisco Catalyst 3850 ports are capable of reduced power modes so that ports not in use can move into a lower power utilization state. Other efficient switch operation features are:

- Cisco Discovery Protocol Version 2 allows the Cisco Catalyst 3850 Series Switches to negotiate a more granular power setting when connecting to a Cisco powered device such as IP phones or access points than what is provided by IEEE classification.
- Per-port power consumption command allows customers to specify maximum power setting on an individual port. Per-port PoE power sensing measures actual power being drawn, enabling more intelligent control of powered devices.
- The PoE MIB provides proactive visibility into power usage and allows customers to set different power-level thresholds.

Environmental Responsibility

Organizations may choose to turn off access point radios to reduce power consumption during off-peak hours. The integrated wireless LAN controller avoids the deployment of additional devices in the network.

Network Management Tools

The Cisco Catalyst 3850 Series Switches offer both a superior CLI for detailed configuration and Cisco Prime™ infrastructure for unified wired plus wireless management. Prime infrastructure provides day 0 and ongoing provisioning, ongoing monitoring and maintenance, configuration templates, and device and user 360-degree views and serves as the FNF collector for user traffic views using the Prime Assurance Manager module.

For detailed information about Cisco Prime infrastructure, go to http://www.cisco.com/en/US/products/ps12239/index.html.

Advanced Security Features

Cisco Catalyst 3850 Series Switches support advanced security features including but not limited to:

- Protection against attackers:
  - Port security secures the access to an access or trunk port based on MAC address. It limits the number of learned MAC addresses to deny MAC address flooding.

© 2017 Cisco and/or its affiliates. All rights reserved. This document is Cisco Public Information.

- DHCP snooping prevents malicious users from spoofing a DHCP server and sending out bogus addresses. This feature is used by other primary security features to prevent a number of other attacks such as ARP poisoning.
- Dynamic ARP inspection (DAI) helps ensure user integrity by preventing malicious users from exploiting the insecure nature of ARP.
- IP source guard prevents a malicious user from spoofing (that is, taking over) another user's IP address by creating a binding table between the client's IP and MAC address, port, and VLAN, and by using it to selectively block bogus packets.
- The Unicast Reverse Path Forwarding (uRPF) feature helps mitigate problems caused by the introduction of malformed or forged (spoofed) IP source addresses into a network by discarding IP packets that lack a verifiable IP source address.
- Bidirectional data support on a SPAN port allows the Cisco intrusion detection system (IDS) to take action when an intruder is detected.

- User authentication:
  - Flexible authentication that supports multiple authentication mechanisms, including 802.1X, MAC authentication bypass, and web authentication using a single, consistent configuration.
  - RADIUS change of authorization and downloadable calls for comprehensive policy management capabilities.
  - Private VLAN edge restricts traffic between hosts in a switch by segregating traffic at Layer 2, turning a broadcast segment into a nonbroadcast multiaccess like segment. Private VLAN edge provides security and isolation between switch ports, which helps ensure that users cannot snoop on other users' traffic.
  - Multidomain authentication allows an IP phone and a PC to authenticate on the same switch port while placing them on appropriate voice and data VLAN.
  - MAC address notification allows administrators to be notified of users added to or removed from the network.
  - Mobility and security for secure, reliable wireless connectivity and consistent end-user experience. Increased network availability through proactive blocking of known threats.
  - IGMP filtering provides multicast authentication by filtering out nonsubscribers and limits the number of concurrent multicast streams available per port.
- ACLs:
  - Cisco security VLAN ACLs on all VLANs prevent unauthorized data flows from being bridged within VLANs.
  - Cisco standard and extended IP security router ACLs define security policies on routed interfaces for control-plane and data-plane traffic. IPv6 ACLs can be applied to filter IPv6 traffic.
  - Port-based ACLs for Layer 2 interfaces allow security policies to be applied on individual switch ports.
- Device access:
  - Secure Shell (SSH) Protocol, Kerberos, and Simple Network Management Protocol Version 3 (SNMPv3) provide network security by encrypting administrator traffic during Telnet and SNMP sessions. SSH Protocol, Kerberos, and the cryptographic version of SNMPv3 require a special cryptographic software image because of U.S. export restrictions.

© 2017 Cisco and/or its affiliates. All rights reserved. This document is Cisco Public Information.

- TACACS+ and RADIUS authentication facilitates centralized control of the switch and restricts unauthorized users from altering the configuration.
- Multilevel security on console access prevents unauthorized users from altering the switch configuration.

- Bridge protocol data unit (BPDU) Guard shuts down Spanning Tree PortFast-enabled interfaces when BPDUs are received to avoid accidental topology loops.
- Spanning Tree Root Guard (STRG) prevents edge devices not in the network administrator's control from becoming Spanning Tree Protocol root nodes.
- Wireless end-to-end security offers CAPWAP-compliant DTLS encryption to make sure of encryption between access points and controllers across remote WAN/LAN links.

Resiliency

Borderless networks enable enterprise mobility and business-grade video services. Industry's first unified network (wired plus wireless) location services enable tracking of mobile assets and the users of those assets for both wired plus wireless devices. The true borderless experience is enabled by the following feature sets in the Cisco Catalyst 3850 Series Switches:

- High availability
- High-performance IP routing
- Superior QoS

High Availability

In addition to StackWise-480 and StackPower[11], the Cisco Catalyst 3850 Series supports high-availability features including but not limited to the following:

- Cross-Stack EtherChannel provides the ability to configure Cisco EtherChannel technology across different members of the stack for high resiliency.
- Flexlink provides link redundancy with convergence time less than 100ms.
- IEEE 802.1s Multiple Spanning Tree Protocol (MSTP) provides rapid spanning-tree convergence independent of spanning-tree timers and also offers the benefit of Layer 2 load balancing and distributed processing.
- Per-VLAN Rapid Spanning Tree (PVRST+) allows rapid spanning-tree (IEEE 802.1w) reconvergence on a per-VLAN spanning-tree basis, providing simpler configuration than MSTP. In both MSTP and PVRST+ modes, stacked units behave as a single spanning-tree node.
- Switch-port autorecovery ("err-disable" recovery) automatically attempts to reactivate a link that is disabled because of a network error.

[*] Stackpower is not supported on the 48-port 10G SFP+ switch model

[11] Stackpower is not supported on the 48-port 10G SFP+ switch model

© 2017 Cisco and/or its affiliates. All rights reserved. This document is Cisco Public Information.

High-Performance IP Routing

The Cisco Express Forwarding hardware routing architecture delivers extremely high-performance IP routing in the Cisco Catalyst 3850 Series Switches:

- IP unicast routing protocols (static, Routing Information Protocol Version 1 [RIPv1], and RIPv2, RIPng, Enhanced Interior Gateway Routing Protocol [EIGRP] stub) are supported for small-network routing applications with the IP Base feature set. Limited static routing with the LAN Base feature set. Equal-cost routing facilitates Layer 3 load balancing and redundancy across the stack.
- Advanced IP unicast routing protocols (Open Shortest Path First [OSPF], EIGRP, Border Gateway Protocol Version 4 [BGPv4], and Intermediate System-to-Intermediate System Version 4 [IS-ISv4]) are supported for load balancing and constructing scalable LANs. IPv6 routing (OSPFv3, EIGRPv6) is supported in hardware for maximum performance. OSPF for routed access is included in the IP Base image. The IP Services feature set is required for full OSPF, EIGRP, BGPv4, and IS-ISv4.
- Policy-based routing (PBR) allows superior control by facilitating flow redirection regardless of the routing protocol configured. The IP Base feature set is required for PBR. Virtual routing and forwarding (VRF)-Lite enables a service provider to support two or more VPNs, with overlapping IP addresses. The IP Services feature set is required for VRF-Lite.
- Protocol-independent multicast (PIM) for IP multicast routing is supported, including PIM sparse mode (PIM-SM), PIM dense mode (PIM-DM), PIM sparse-dense mode, and source-specific multicast (SSM). The IP Services feature set is required.
- IPv6 addressing is supported on interfaces with appropriate show commands for monitoring and troubleshooting.

Superior QoS

The Cisco Catalyst 3850 Series offers Gigabit Ethernet speed with intelligent services that keep traffic flowing smoothly, even at 10 times the normal network speed. Industry-leading mechanisms for cross-stack marking, classification, and scheduling deliver superior performance for data, voice, and video traffic, all at wire speed.

The following are some of the QoS features supported in the Cisco Catalyst 3850 Series Switches:

- Granular wireless bandwidth management and fair sharing use Cisco's proven Cisco IOS Software and UADP ASIC technology to provide hierarchical bandwidth management at line rate (per access point, per radio, per SSID, per client-based policies). Fair sharing across the users within an SSID makes sure that no single user is starved because of other heavy-hitting users. Fair sharing is automatically enabled for wireless at user level as well as SSID level.
- 802.1p CoS and DSCP field classification is provided, using marking and reclassification on a per-packet basis by source and destination IP address, MAC address, or Layer 4 Transmission Control Protocol/User Datagram Protocol (TCP/UDP) port number.
- Shaped round robin (SRR) scheduling helps ensure differential prioritization of packet flows by intelligently servicing the ingress queues and egress queues. Weighted tail drop (WTD) provides congestion avoidance at the ingress and egress queues before a disruption occurs. Strict priority queuing helps ensure that the highest priority packets are serviced ahead of all other traffic.
- The Cisco committed information rate (CIR) function provides bandwidth in increments as low as 8 Kbps.

© 2017 Cisco and/or its affiliates. All rights reserved. This document is Cisco Public Information.

- Rate limiting is provided based on source and destination IP address, source and destination MAC address, Layer 4 TCP/UDP information, or any combination of these fields, using QoS ACLs (IP ACLs or MAC ACLs), class maps, and policy maps.
- Eight egress queues per port for wired traffic and four egress queues for wireless help enable differentiated management of different traffic types across the stack for wired traffic. Up to 2000 aggregate policers are available per switch.

Application Visibility and Control Using Flexible NetFlow

Cisco IOS Software FNF is the next generation in flow visibility technology, allowing optimization of the network infrastructure, reducing operation costs, and improving capacity planning and security incident detection with increased flexibility and scalability. The Cisco Catalyst 3850 provides optimized application visibility with FNF across wired plus wireless. The switch is capable of up to 48,000 flow entries on 48-port models and up to 24,000 flow entries on 12-port and 24-port models across wired plus wireless. With UADP ASIC, Cisco Catalyst 3850 delivers next-generation flow technology with unprecedented flexibility and comprehensive visibility extending from Layer 2 (MAC and VLAN) to Layer 4 (TCP/UDP) flags and so on across wired plus wireless traffic. The Cisco Catalyst 3850 switch is Medianet capable to provide visibility and troubleshooting capabilities across wired plus wireless video traffic. Specific Medianet features will be enabled in future software updates.

The flow data collected by FNF can be exported to an external collector for analysis and reporting or tracked by the EEM. The Cisco Catalyst 3850 enables powerful on-box and customizable event correlation and policy actions with EEM, allowing the switches to trigger customized event alarms or policy actions when the predefined condition is met. With no external appliance required, customers are able to use existing infrastructure to perform traffic monitoring, making traffic analysis economical even on a large IP network.

Details about Cisco FNF are available at http://www.cisco.com/en/US/prod/collateral/iosswrel/ps6537/ps6555/ps6601/ps6965/product_data_sheet0900aecd804b590b.html.

High-performance video over wireless integrates Cisco VideoStream technology to optimize the delivery of video applications across the WLAN.

Wired plus wireless IP telephony supports unified communications for improved collaboration through messaging, presence, and conferencing and supports all Cisco Unified Communications wireless IP phones for cost-effective, real-time voice service.

Audio Video Bridging

With Cisco IOS® XE Software Release 16.3, Cisco Catalyst 3850 MultiGigabit and 3850 10G SFP+ now support the IEEE 802.1 AVB standard. This standard provided the means for highly reliable delivery of low-latency, time-synchronized AV streaming services through Layer 2 Ethernet networks. The standard also makes it easier to integrate new services and for AV equipment from different vendors to interoperate. Whether the AV endpoint connections are analog or are inflexible digital one to one, the network transport enables many-to-many transparent plug-and-play connections for multiple AV endpoints.

© 2017 Cisco and/or its affiliates. All rights reserved. This document is Cisco Public Information.

Benefits:

- Improves quality of experience by lowering jitter and latency for time-synchronized delivery of high-quality AV
- Provides scalability of applications across networked deployments, including expansive and complex AV infrastructure
- Lowers total cost of ownership (TCO) with reduced cabling (lowers CapEx) and no license fees (lowers OpEx)

*For more details about AVB and specific models supported, check http://www.cisco.com/go/avb.

Deployment Options

Campus

In a campus-type deployment, operating the Cisco Catalyst 3850 in the mobility agent mode and centralizing the mobility controller functionality in a WLC 5760, WLC 5508, or WiSM2 helps achieve better scalability and performance. The Cisco Catalyst 3850 provides CAPWAP termination for access points, uniform policy enforcement for wireless clients, better wireless bandwidth, and uniform Cisco IOS Software-based configuration and monitoring for wired plus wireless features. The mobility controller provides central mobility, RRM, and CleanAir coordination.

Backward compatibility with traditional centralized wireless deployment mode on the WLC 5508, WiSM2, and WLC 5760 helps ensure that customers can migrate to the Cisco Catalyst 3850-based converged access approach in phases, providing a continued controller for existing access points. This migration also provides investment protection on the existing wireless controller infrastructure. A phased adoption of the new Cisco Catalyst 3850 helps ensure that migration to the converged access mode of wireless is seamless. Figure 10 shows a Cisco Catalyst 3850 in the campus type deployment.

© 2017 Cisco and/or its affiliates. All rights reserved. This document is Cisco Public Information.

Figure 10. Mobility Controller (MC) and Mobility Agent (MA)

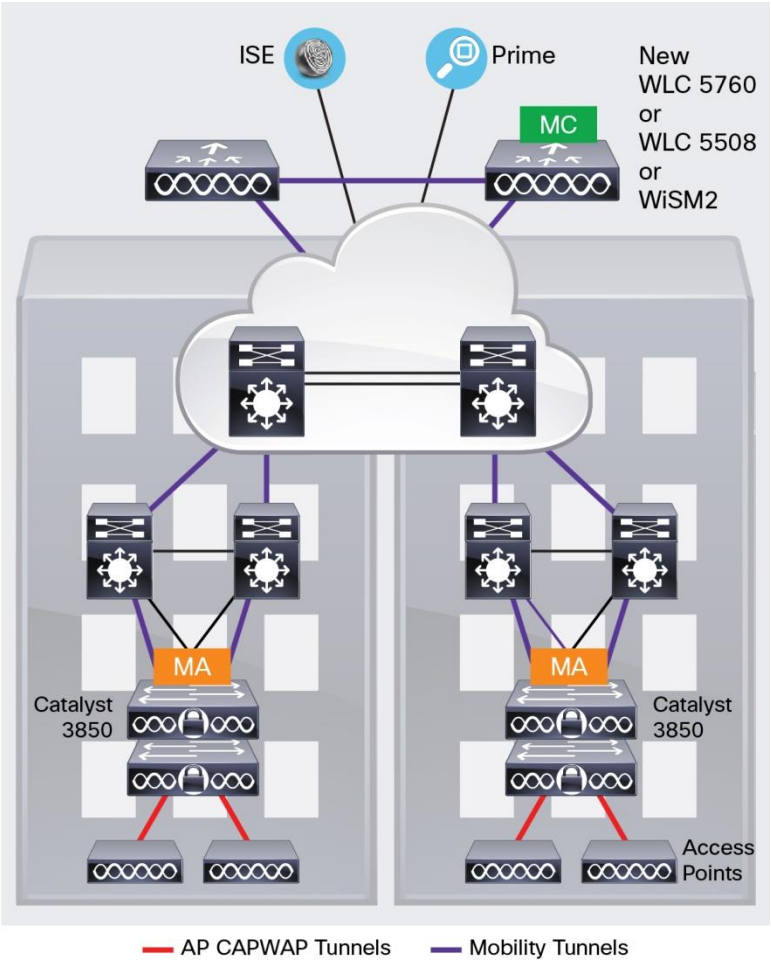

Branch

The Cisco Catalyst 3850 is optimized for branch deployments when it operates in mobility controller mode. In this mode, not only can the switch terminate CAPWAP tunnels from the access points and provide client connectivity, it can also manage mobility within the branch. This eliminates the need for a local controller in every branch in addition to the access-layer switches. Also, complete visibility into the wired plus wireless traffic means that the WAN router can prioritize the right wired plus wireless traffic in and out of the branch. Figure 11 shows a Cisco Catalyst 3850 in a branch access type deployment.

© 2017 Cisco and/or its affiliates. All rights reserved. This document is Cisco Public Information.

Figure 11. Deploying the Cisco Catalyst 3850 in the Branch Access

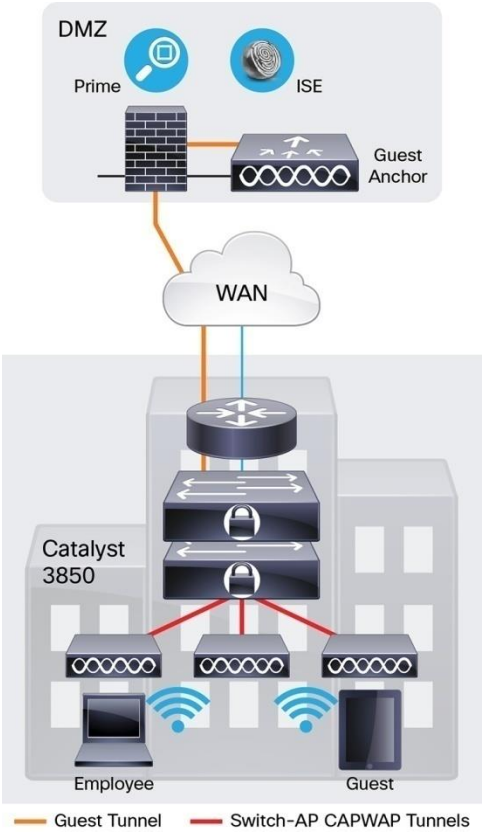

The new 12-port and 24-port SFP+ or SFP-based Cisco Catalyst 3850 models as well as the nonstackable 48-port SFP+ model can also be used in the branch to aggregate traffic from smaller access switches through fiber links for more secure and EMI-sensitive deployments (Figure 12).

Figure 12. Deploying Mixed Copper and Fiber Connections with a Cisco Catalyst 3850 Stack in the Branch

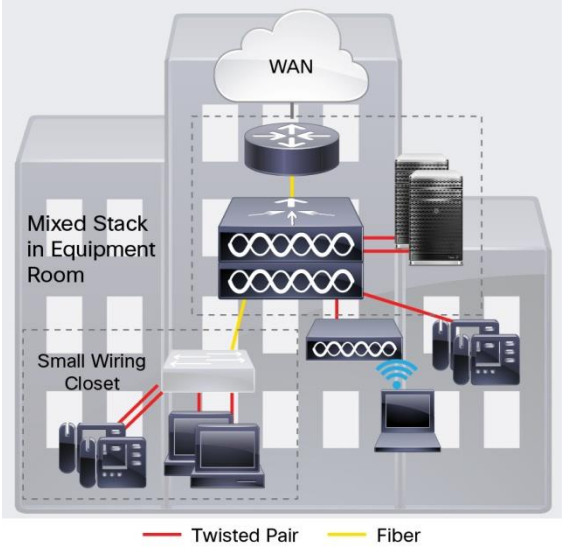

© 2017 Cisco and/or its affiliates. All rights reserved. This document is Cisco Public Information.

Cisco Catalyst 3850 Series Specifications

Switch Performance

Table 9 shows Cisco Catalyst 3850 Series Switches performance specifications.

Table 9. Cisco Catalyst 3850 Performance Specifications

Performance Numbers for All Switch Models	
Switching capacity	176 Gbps on 48-port Gigabit Ethernet model 92 Gbps on 24-port Gigabit Ethernet model 68 Gbps on 12-port Gigabit Ethernet model 640 Gbps on 24-port Multigigabit Ethernet model* 472 Gbps on 48-port Multigigabit Ethernet model 1280 Gbps on 48-port 10 Gigabit Ethernet SFP+ model* 640 Gbps (packet size >= 80 bytes) on 24-port 10 Gigabit Ethernet SFP+ model* 320 Gbps on 12-port 10 Gigabit Ethernet SFP+ model* * Packet size >= 80 bytes
Stacking bandwidth	480 Gbps
Total number of MAC addresses	32,000
Total number of IPv4 routes (ARP plus learned routes)	24,000
FNF entries	48,000 flow on 48-port Gigabit Ethernet models 24,000 flows on 12-port and 24-port Gigabit Ethernet models 96,000 flows on 48-port 10 Gigabit Ethernet SFP+ model 48,000 flows on 24-port 10 Gigabit Ethernet SFP+ model 24,000 flows on 12-port 10 Gigabit Ethernet SFP+ model
DRAM	4 GB (8 GB on 48-port SFP+ model)
Flash	2 GB (4 GB on 12-port and 24-port SFP+ models, 8 GB on 48-port SFP+ model)
VLAN IDs	4,000
Total switched virtual interfaces (SVIs)	1,000
Jumbo frame	9198 bytes
Total routed ports per 3850 stack	208
Wireless	
Number of access points per switch/stack	100
Number of wireless clients per switch/stack	2000
Total number of WLANs per switch	64
Wireless bandwidth per switch	Up to 40 Gbps on 48-port Gigabit Ethernet model Up to 20 Gbps on 24-port Gigabit Ethernet model
Supported Aironet access point series	3600, 3500, 2600, 1600, 1260, 1140, 1040
Forwarding Rate of Switch Models (with 2 x 10 Gigabit + 2 x 1 Gigabit Ethernet uplinks for 12-Port and 24-Port Models and 4 x 10 Gigabit Ethernet Uplinks for 48-Port Models)	
Model	**Forwarding Rate**
WS-C3850-12S	50.5 Mpps
WS-C3850-24T **WS-C3850-24P** **WS-C3850-24S**	68.4 Mpps
WS-C3850-48T **WS-C3850-48P** **WS-C3850-48F**	130.95 Mpps
WS-C3850-24XU	500 Mpps (80B packets)
WS-C3850-12X48U	460 Mpps (64B packets)
WS-C3850-12XS	227.28 Mpps

© 2017 Cisco and/or its affiliates. All rights reserved. This document is Cisco Public Information.

Performance Numbers for All Switch Models	
WS-C3850-24XS	454.55 Mpps
WS-C3850-48XS	909 Mpps

Dimensions, Weight, Acoustic, Mean Time between Failure, and Environmental Range Specifications for Cisco Catalyst 3850 Series Switches

Table 10 shows dimensions, weight, acoustic, mean time between failure (MTBF), and environmental range. Weight does not include an uplink FRU. Weight includes the chassis assembly as it is shipped (with fans), one power supply and, and one power supply slot blank.

Table 10. Dimensions, Weight, Acoustic, MTBF, and Environmental Range[12]

Dimensions (H x W x D)	Inches	Centimeters
WS-C3850-12S **WS-C3850-24S** **WS-C3850-24T** **WS-C3850-24P** **WS-C3850-48T** **WS-C3850-48P**	1.75 x 17.5 x 17.7	4.45 x 44.5 x 45.0
WS-C3850-48F **WS-C3850-48U** **WS-C3850-24U** **WS-C3850-24XU** **WS-C3850-12X48U**	1.75 x 17.5 x 19.2	4.45 x 44.5 x 48.8
WS-C3850-12XS **WS-C3850-24XS**	1.75 x 17.5 x 17.7	4.45 X 44.5 x 45.0
WS-C3850-48XS	1.75 x 17.5 x 20.1	4.45 X 44.5 x 51.1
Weight	**Pounds**	**Kilograms**
WS-C3850-12S	15.48	7.02
WS-C3850-24S	15.5	7.03
WS-C3850-24T	15.9	7.2
WS-C3850-24P	16.3	7.4
WS-C3850-24U	16.5	7.5
WS-C3850-48T	17.0	7.7
WS-C3850-48P	17.4	7.9
WS-C3850-48F	17.6	8.0
WS-C3850-48U	17.6	8.0
WS-C3850-24XU	17.6	8.0
WS-C3850-12X48U	17.6	8.0
WS-C3850-12XS	12.9	5.8
WS-C3850-24XS	13.5	6.1
WS-C3850-48XS	16.42	7.45
C3850-NM-4-1G	0.66	0.30
C3850-NM-2-10G	0.71	0.32

[12] Additional information about the 48-port SFP+ model will be provided at time of shipment.

© 2017 Cisco and/or its affiliates. All rights reserved. This document is Cisco Public Information.

C3850-NM-4-10G	0.75	0.34
C3850-NM-8-10G	0.74	0.34
C3850-NM-2-40G	0.62	0.28
MTBF Hours		
WS-C3850-12S	315,840	
WS-C3850-24S	300,760	
WS-C3850-24T	303,230	
WS-C3850-24P	269,450	
WS-C3850-24U	237,310	
WS-C3850-48T	303,660	
WS-C3850-48P	241,050	
WS-C3850-48F	241,050	
WS-C3850-48U	205,110	
WS-C3850-24XU	203,150	
WS-C3850-12X48U	202,030	
WS-C3850-12XS	371,440	
WS-C3850-24XS	307,990	
WS-C3850-32XS	307,990	
WS-C3850-48XS	286,900	
PWR-C1-350WAC	580,710	
PWR-C1-715WAC	664,055	
PWR-C1-1100WAC	392,174	
PWR-C1-440WDC	469,350	
C3850-NM-4-1G	7,052,100	
C3850-NM-2-10G	4,315,970	
C3850-NM-4-10G	3,835,330	
C3850-NM-8-10G	6,544,410	
C3850-NM-2-40G	9,303,100	
Environmental Ranges		
With AC power supply **Operating environment and altitude**	Normal operating temperature* and altitudes: • -5ºC to +45ºC, up to 5000 feet (1500m) • -5ºC to +40ºC, up to 10,000 feet (3000m) * Minimum ambient temperature for cold start is 32°F (0°C) Short-term* exceptional conditions: • -5ºC to +50ºC, up to 5000 feet (1500m) • -5ºC to +45ºC, up to 10,000 feet (3000m) • -5ºC to +45ºC, at sea level with single fan failure * Not more than following in one-year period: 96 consecutive hours, or 360 hours total, or 15 occurrences.	

© 2017 Cisco and/or its affiliates. All rights reserved. This document is Cisco Public Information.

With DC power supply **Operating environment and altitude (NEBS)**	Normal operating temperature and altitudes: • -5ºC to +45ºC, up to 6000 feet (1800m) • -5ºC to +40ºC, up to 10,000 feet (3000m) • -5ºC to +35ºC, up to 13,000 feet (4000m) Short-term* exceptional conditions: • -5ºC to +55ºC, up to 6000 feet (1800m) • -5ºC to +50ºC, up to 10,000 feet (3000m) • -5ºC to +45ºC, up to 13,000 feet (4000m) • -5ºC to +45ºC, at sea level with single fan failure * Not more than following in one-year period: 96 consecutive hours, or 360 hours total, or 15 occurrences.
Relative humidity	10% to 95%, noncondensing
Acoustic noise **Measured per ISO 7779 and declared per ISO 9296** **Bystander positions operating to an ambient temperature of 25°C**	With AC or DC power supply (with 24 PoE+ ports loaded): • LpA: 43dB typical, 45dB maximum • LwA: 5.2B typical, 5.5B maximum Typical: Noise emission for a typical configuration Maximum: Statistical maximum to account for variation in production
Storage environment	Temperature: -40ºC to 70ºC Altitude: 15,000 ft
Vibration	Operating: 0.41Grms from 3 to 500Hz with spectral break points of 0.0005 G2/Hz at 10Hz and 200Hz 5dB/octave roll off at each end. Nonoperating: 1.12Grms from 3 to 500Hz with spectral break points of 0.0065 G2/Hz at 10Hz and 100Hz 5dB/octave roll off at each end.
Shock	Operating: 30G, 2ms half sine
	Nonoperating: 55G, 10ms trapezoid

Connectors for Cisco Catalyst 3850 Series

Table 11 shows the supported connectors.

Table 11. Connectors

Connectors and cabling	• 1000BASE-T ports: RJ-45 connectors, 4-pair Cat-5E UTP cabling • Multigig-T ports: RJ-45 connectors, 4-pair Cat-5E, Cat-6, Cat6A UTP cabling • 1000BASE-T SFP-based ports: RJ-45 connectors, 4-pair Cat-5E UTP cabling • 100BASE-FX, 1000BASE-SX, -LX/LH, -ZX, -BX10, DWDM and CWDM SFP transceivers: LC fiber connectors (single-mode or multimode fiber) • 10GBASE-SR, LR, LRM, ER, ZR, DWDM SFP+ transceivers: LC fiber connectors (single-mode or multimode fiber) • CX1 cable assemblies: SFP+ connector • Cisco StackWise-480 stacking ports: copper-based Cisco StackWise cabling • Cisco StackPower: Cisco proprietary power stacking cables • Ethernet management port: RJ-45 connectors, 4-pair Cat-5 UTP cabling • Management console port: RJ-45-to-DB9 cable for PC connections
Power connectors	• Customers can provide power to a switch by using either the internal power or StackPower from another member in the power stack. The connectors are located at the back of the switch. • Internal power supply connector: The internal power supply is an autoranging unit. The internal power supply supports input voltages between 100 and 240VAC. Use the supplied AC power cord to connect the AC power connector to an AC power outlet.

For the latest Cisco transceiver module compatibility information, refer to http://www.cisco.com/c/en/us/support/interfaces-modules/transceiver-modules/products-device-support-tables-list.html.

© 2017 Cisco and/or its affiliates. All rights reserved. This document is Cisco Public Information.

Management and Standards Support for Cisco Catalyst 3850 Series Switches

Table 12 shows management and standards support for the Cisco Catalyst 3850 Series.

Table 12. Management and Standards Support for the Cisco Catalyst 3850 Series

Description	Specification	
Management	BRIDGE-MIB	CISCO-SNMP-TARGET-EXT-MIB
	CISCO-AUTH-FRAMEWORK-MIB	CISCO-STACKMAKER-MIB
	CISCO-BGP4-MIB, BGP4-MIB	CISCO-MEMORY-POOL-MIB
	CISCO-BRIDGE-EXT-MIB	CISCO-STP-EXTENSIONS-MIB
	CISCO-BULK-FILE-MIB	CISCO-SYSLOG-MIB
	CISCO-CABLE-DIAG-MIB	CISCO-TCP-MIB
	CISCO-CALLHOME-MIB	CISCO-UDLDP-MIB
	CISCO-CEF-MIB	CISCO-VLAN-IFTABLE-RELATIONSHIP-MIB
	CISCO-CIRCUIT-INTERFACE-MIB	CISCO-VLAN-MEMBERSHIP-MIB
	CISCO-ENTITY-VENDORTYPE-OID-MIB	CISCO-VTP-MIB
	CISCO-CONTEXT-MAPPING-MIB	EtherLike-MIB
	CISCO-DEVICE-LOCATION-MIB	HC-RMON-MIB
	CISCO-DHCP-SNOOPING-MIB	IEEE8021-PAE-MIB
	CISCO-EIGRP-MIB	IEEE8023-LAG-MIB
	CISCO-EMBEDDED-EVENT-MGR-MIB	IF-MIB
	CISCO-ENTITY-FRU-CONTROL-MIB	IGMP-MIB
	CISCO-ENTITY-SENSOR-MIB	IGMP-STD-MIB
	ENTITY-MIB	IP-FORWARD-MIB
	CISCO-ERR-DISABLE-MIB	IP-MIB
	CISCO-CONFIG-COPY-MIB	IPMROUTE-STD-MIB
	CISCO-FLOW-MONITOR-MIB	LLDP-EXT-MED-MIB
	CISCO-FTP-CLIENT-MIB	LLDP-MIB
	CISCO-HSRP-EXT-MIB	NOTIFICATION-LOG-MIB
	CISCO-HSRP-MIB	OLD-CISCO-MEMORY-MIB
	CISCO-IETF-ISIS-MIB	CISCO-CDP-MIB
	CISCO-IF-EXTENSION-MIB	POWER-ETHERNET-MIB
	CISCO-IGMP-FILTER-MIB	RMON2-MIB
	CISCO-CONFIG-MAN-MIB	RMON-MIB
	CISCO-IP-CBR-METRICS-MIB	SNMP-COMMUNITY-MIB
	CISCO-IPMROUTE-MIB	SNMP-FRAMEWORK-MIB
	CISCO-IP-STAT-MIB	SNMP-MPD-MIB
	CISCO-IP-URPF-MIB	SNMP-NOTIFICATION-MIB
	CISCO-L2L3-INTERFACE-CONFIG-MIB	SNMP-PROXY-MIB
	CISCO-LAG-MIB	SNMP-TARGET-MIB
	CISCO-LICENSE-MGMT-MIB	SNMP-USM-MIB
	CISCO-MAC-AUTH-BYPASS-MIB	SNMPv2-MIB
	CISCO-MAC-NOTIFICATION-MIB	SNMP-VIEW-BASED-ACM-MIB
	CISCO-MDI-METRICS-MIB	TCP-MIB
	CISCO-FLASH-MIB	UDP-MIB
	CISCO-OSPF-MIB	CISCO-IMAGE-MIB
	CISCO-OSPF-TRAP-MIB	CISCO-STACKWISE-MIB
	CISCO-PAE-MIB	AIRESPMACE-WIRELESS-MIB
	CISCO-PAGP-MIB	CISCO-LWAPP-IDS-MIB
	CISCO-PIM-MIB	CISCO-LWAPP-AP-MIB
	CISCO-PING-MIB	CISCO-LWAPP-CCX-RM-MIB
	CISCO-PORT-QOS-MIB	CISCO-LWAPP-CLIENT-ROAMING-MIB
	CISCO-PORT-SECURITY-MIB	CISCO-LWAPP-DOT11-CCX-CLIENT-DIAG-MIB
	CISCO-PORT-STORM-CONTROL-MIB	CISCO-LWAPP-DOT11-CCX-CLIENT-MIB
	CISCO-POWER-ETHERNET-EXT-MIB	CISCO-LWAPP-DOT11-CLIENT-CCX-REPORTS-MIB
	CISCO-PRIVATE-VLAN-MIB	

© 2017 Cisco and/or its affiliates. All rights reserved. This document is Cisco Public Information.

Description	Specification	
	CISCO-PROCESS-MIB CISCO-PRODUCTS-MIB CISCO-RF-MIB CISCO-RTP-METRICS-MIB CISCO-RTTMON-MIB CISCO-SMART-INSTALL-MIB	CISCO-LWAPP-DOT11-CLIENT-MIB CISCO-LWAPP-DOT11-MIB CISCO-LWAPP-DOWNLOAD-MIB CISCO-LWAPP-LINKTEST-MIB CISCO-LWAPP-MFP-MIB CISCO-LWAPP-MOBILITY-EXT-MIB CISCO-LWAPP-QOS-MIB CISCO-LWAPP-REAP-MIB CISCO-LWAPP-ROGUE-MIB CISCO-LWAPP-RRM-MIB CISCO-LWAPP-SI-MIB CISCO-LWAPP-TSM-MIB CISCO-LWAPP-WLAN-MIB CISCO-LWAPP-WLAN-SECURITY-MIB
Standards	IEEE 802.1as IEEE 802.1s IEEE 802.1w IEEE 802.11 IEEE 802.1x IEEE 802.1x-Rev IEEE 802.3ad IEEE 802.3af IEEE 802.3at IEEE 802.3bz IEEE 802.3x full duplex on 10BASE-T, 100BASE-TX, and 1000BASE-T ports IEEE 802.1D Spanning Tree Protocol IEEE 802.1p CoS prioritization IEEE 802.1Qat Stream Reservation Protocol IEEE 802.1Qav IEEE 802.1Q VLAN IEEE 802.3 10BASE-T specification IEEE 802.3u 100BASE-TX specification IEEE 802.3ab 1000BASE-T specification IEEE 802.3z 1000BASE-X specification	RMON I and II standards SNMPv1, SNMPv2c, and SNMPv3

Power Supply Specifications

Table 13 lists the power specifications for the Cisco Catalyst 3850 Series based on the kind of power supply used.

Table 13. Power Specifications for Cisco Catalyst 3850 Series

Description	Specification			
	PWR-C1-1100WAC	**PWR-C1-715WAC**	**PWR-C1-350WAC**	**PWR-C1-440WDC**
Power supply rated maximum	1100W	715W	350W	440W
Total output BTU (Note: 1000 BTU/hr = 293W)	3793 BTU/hr, 1100W	2465 BTU/hr, 715W	1207BTU/hr, 350W	1517BTU/hr, 440W
Input-voltage range and frequency	115-240VAC, 50-60 Hz	100-240VAC, 50-60 Hz	100-240VAC, 50-60 Hz	-36VDC to -72VDC
Input current	12-6A	10-5A	4-2A	<8A at -72VDC <16A at -36VDC
Output ratings	-56V at 19.64A	-56V at 12.8A	-56V at 6.25A	-56V at 7.86A
Output holdup time	10 ms minimum at 102.5VAC	16.7 ms minimum at 100VAC	16.7 ms minimum at 100VAC	> 2ms at -48VDC

© 2017 Cisco and/or its affiliates. All rights reserved. This document is Cisco Public Information.

Description	Specification			
Power-supply input receptacles	IEC 320-C16 (IEC60320-C16)	IEC 320-C16 (IEC60320-C16)	IEC 320-C16 (IEC60320-C16)	Terminal strip
Power cord rating	13A	13A	10A	20A at 100VDC
Physical specifications	(H x W x D): 1.58 X 3.25 X 13.7 in Weight: 3 lb (1.4 kg)	(H x W x D): 1.58 X 3.25 X 12.20 in Weight: 2.8 lb (1.3 kg)	(H x W x D): 1.58 X 3.25 X 12.20 in Weight: 2.6 lb (1.2 kg)	(H x W x D): 1.58 X 3.25 X 12.20 in Weight: 2.6 lb (1.2 kg)
Operating temperature	23 to 113°F (-5 to 45°C)			
Storage temperature	-40 to 158°F (-40 to 70°C)			
Relative humidity operating and nonoperating noncondensing	5 to 90% noncondensing			
Altitude	10,000 ft. (3000 meters), up to 45°C			
MTBF	Calculated MTBF must be greater than 300,000 using Telcordia SR-332, Method 1, Case 3. Demonstrated MTBF is 500,000 hr (with 90% confidence level).			
EMI and EMC compliance	FCC Part 15 (CFR 47) Class A ICES-003 Class A EN 55022 Class A CISPR 22 Class A AS/NZS 3548 Class A BSMI Class A (AC input models only) VCCI Class A EN 55024, EN300386, EN 50082-1, EN 61000-3-2, EN 61000-3-3 EN61000-4-2, EN61000-4-3, EN61000-4-4, EN61000-4-5, EN61000-4-6, EN 61000-6-1			
Safety compliance	UL 60950-1, CAN/CSA-C22.2 No. 60950-1, EN 60950-1, IEC 60950-1, CCC, CE Marking			
LED indicators	"AC OK": Input power to the power supply is OK "PS OK": Output power from the power supply is OK			

Power Consumption of Standalone Cisco Catalyst 3850 Series Switches

Table 14 shows power consumption of standalone Cisco Catalyst 3850 Series Switches based on Alliance for Telecommunications Industry Solutions (ATIS) testing using IMIX distribution stream traffic, with input voltage of 115VAC at 60 Hz and no PoE loading. The values given are the maximum possible power consumption numbers under the respective test scenarios.

Table 14. Power Consumptions (in Watts) of Standalone Cisco Catalyst 3850 Series

Models	Uplink Module	Power Consumption (W) (No More Than)			
		0% Traffic	10% Traffic	100% Traffic	Weighted Average
WS-C3850-12S	C3850-NM-4-1G	85.84	85.89	86.75	86.0
WS-C3850-24S		104.48	104.25	105.12	104.4
WS-C3850-12S	C3850-NM-2-10G	87.95	88.30	90.04	88.4
WS-C3850-24S		106.24	106.58	109.75	106.9
WS-C3850-24T	C3850-NM-4-1G	83.47	82.86	83.76	83.04
WS-C3850-24P		86.81	86.22	87.11	86.40
WS-C3850-24U		81.5	81.4	82.1	81.5
WS-C3850-48T		117.74	116.62	117.59	116.89
WS-C3850-48P		125.35	124.15	125.15	124.43
WS-C3850-48F		130.10	128.91	129.85	129.18
WS-C3850-48U		114.8	114.7	115.6	114.8

© 2017 Cisco and/or its affiliates. All rights reserved. This document is Cisco Public Information.

Models	Uplink Module	Power Consumption (W) (No More Than)			
		0% Traffic	10% Traffic	100% Traffic	Weighted Average
WS-C3850-24T	C3850-NM-2-10G	81.97	81.83	84.97	82.16
WS-C3850-24P		85.22	85.04	88.32	85.39
WS-C3850-24U		82.8	82.6	84.8	82.9
WS-C3850-48T		117.56	116.74	120.40	117.23
WS-C3850-48P		123.78	122.90	126.75	123.42
WS-C3850-48F		129.89	129.06	132.36	129.18
WS-C3850-48U		116.8	116.9	119.9	117.2
WS-C3850-48T	C3850-NM-4-10G	120.56	120.28	127.24	121.02
WS-C3850-48P		129.59	129.64	135.96	130.27
WS-C3850-48F		137.57	137.06	143.77	137.81
WS-C3850-48U		119.9	121.2	127.7	121.5
WS-C3850-12XS		109.0	109.5	112.7	109.7
WS-C3850-24XU	C3850-NM-8-10G	229.7	231.2	248.1	232.7
WS-C3850-12X48U		191.3	193.6	208.1	194.8
WS-C3850-24XS		183.6	185.3	205.5	187.2
WS-C3850-24XS	C3850-NM-2-40G	159.2	161.1	177.0	162.5
WS-C3850-48XS	None	267.0	268.3	288.1	270.1

Safety and Compliance

Table 15 lists the safety and compliance information for the Cisco Catalyst 3850 Series.

Table 15. Safety and Compliance Information for Cisco Catalyst 3850 Series

Description	Specification
Safety certifications	UL 60950-1 Second Edition CAN/CSA-C22.2 No. 60950-1 Second Edition EN 60950-1 Second Edition IEC 60950-1 Second Edition NOM (obtained by partners and distributors)
Electromagnetic emissions certifications	47CFR Part 15 (CFR 47) Class A (FCC Part 15 Class A) AS/NZS CISPR22 Class A CISPR22 Class A EN55022 Class A ICES003 Class A VCCI Class A EN61000-3-2 EN61000-3-3 KN22 Class A KCC CNS13438 Class A EN55024 CISPR24 KN24
Environmental	Reduction of Hazardous Substances (ROHS) 5
Noise specifications	Office Product Spec: 48dBA at 30°C (refer to ISO 7779)
Telco	CLEI code

© 2017 Cisco and/or its affiliates. All rights reserved. This document is Cisco Public Information.

Cisco Enhanced Limited Lifetime Hardware Warranty

The Cisco Catalyst 3850 Series Switches come with an E-LLW that includes NBD delivery of replacement hardware where available and 90 days of 8x5 Cisco TAC support.

Your formal warranty statement, including the warranty applicable to Cisco software, appears in the Cisco information packet that accompanies your Cisco product. We encourage you to review carefully the warranty statement shipped with your specific product before use.

Cisco reserves the right to refund the purchase price as its exclusive warranty remedy.

For further information about warranty terms, visit http://www.cisco.com/go/warranty. Table 16 provides information about the E-LLW.

Table 16. E-LLW Details

	Cisco E-LLW
Device covered	Applies to Cisco Catalyst 3850 Series Switches.
Warranty duration	As long as the original customer owns the product.
EoL policy	In the event of discontinuance of product manufacture, Cisco warranty support is limited to 5 years from the announcement of discontinuance.
Hardware replacement	Cisco or its service center will use commercially reasonable efforts to ship a replacement for NBD delivery, where available. Otherwise, a replacement will be shipped within 10 working days after receipt of the RMA request. Actual delivery times might vary depending on customer location.
Effective date	Hardware warranty commences from the date of shipment to customer (and in case of resale by a Cisco reseller, not more than 90 days after original shipment by Cisco).
TAC support	Cisco will provide during business hours, 8 hours per day, 5 days per week basic configuration, diagnosis, and troubleshooting of device-level problems for up to a 90-day period from the date of shipment of the originally purchased Cisco Catalyst 3850 product. This support does not include solution or network-level support beyond the specific device under consideration.
Cisco.com access	Warranty allows guest access only to Cisco.com.

Licensing for Cisco Catalyst 3850 Series Switches

The three feature sets available with all Cisco Catalyst 3850 Series Switches are:

- LAN Base: Enterprise access layer 2 switching features
- IP Base: Enterprise access layer 3 switching features
- IP Services: Advanced enterprise layer 3 switching (IPv4 and IPv6) features

The LAN Base feature set offers enhanced intelligent services that include comprehensive Layer 2 features, with up to 255 VLANs. The IP Base feature set provides entry-level enterprise services in addition to all LAN Base features, with 1K VLANs. IP Base also includes the support for wireless controller functionality (mobility agent and mobility controller role; additional access point license required for mobility controller role), routed access, smart operations, FNF, and so on. The IP Services feature set provides full enterprise services that include advanced Layer 3 features such as EIGRP, OSPF, BGP, PIM, and IPv6 routing such as OSPFv3 and EIGRPv6. All software feature sets support advanced security and MQC-based QoS.

The Cisco Catalyst 3850 Series Switches with LAN Base feature set can only stack with other Cisco Catalyst 3850 Series LAN Base switches. The same applies to IP Base and IP Services as well. A mixed stack of LAN Base switch with IP Base or IP Services feature set is not supported.

© 2017 Cisco and/or its affiliates. All rights reserved. This document is Cisco Public Information.

The 12-port and 24-port SFP+- and SFP-based models as well as the 48-port SFP+ model can only be ordered with IP Base or IP Services licenses. Therefore, in order to stack with LAN Base models, they need to be configured in LAN Base mode from the CLI.

Customers can transparently upgrade the software feature set in the Cisco Catalyst 3850 Series Switches through Cisco IOS Software CLI using the right to use (RTU)-based software upgrade process. Software activation enables the Cisco IOS Software feature sets. Based on the license's type, Cisco IOS Software activates the appropriate feature set. License types can be changed, or upgraded, to activate a different feature set.

Access Point License for Cisco Catalyst 3850

An access point license is required for Cisco Catalyst 3850 operating in mobility controller mode. No access point license is required for 3850 operating in mobility agent mode. This functionality is included in the IP Base feature set. Other devices that can act as mobility controller are the WLC 5760, WLC 5508, and WiSM2 wireless controllers. Access point licenses can be transferred only between two 3850 switches or between 3850 and 5760 controller and vice versa.

Software Policy for Cisco Catalyst 3850 Series Switches

Customers with Cisco Catalyst LAN Base and IP Base software feature sets will be provided with maintenance updates and bug fixes designed to maintain the compliance of the software with published specifications, release notes, and industry standards compliance as long as the original end user continues to own or use the product or up to one year from the end-of-sale date for this product, whichever occurs earlier. Customers with licenses for our IP Services software images require a service support contract such as Cisco SMARTnet™ Service to download updates. This policy supersedes any previous warranty or software statement and is subject to change without notice.

Cisco ONE Software

Cisco ONE Software for Access Switching is available for the Cisco Catalyst 3850 Series Switches.

Cisco ONE Software is a new way for customers to purchase and use our infrastructure software. It offers a simplified consumption model, centered on common customer scenarios in the data center, WANs, and LANs.

Cisco ONE Software and services provide customers with four primary benefits:

- Software suites that address typical customer use scenarios at an attractive price
- Investment protection of their software purchase through software services-enabled license portability
- Access to ongoing innovation and new technology with Cisco Software Support Service (SWSS)
- Flexible licensing models to smoothly distribute customer's software spend over time

For ordering information for Cisco ONE Software for the Cisco Catalyst 3850 Series Switches, go to http://www.cisco.com/c/en/us/products/software/one-access/switching-part-numbers.html.

Cisco and Partner Services for Next-Generation Cisco Catalyst Fixed Switches

Enable the innovative, secure, intelligent edge in the Borderless Network Architecture using personalized services from Cisco and our partners. Through a discovery process that begins with understanding your business objectives, we help you integrate the next-generation Cisco Catalyst fixed switches into your architecture and incorporate network services onto that platform. Sharing knowledge and leading practices, we support your success every step of the way as you deploy, absorb, manage, and scale new technology.

© 2017 Cisco and/or its affiliates. All rights reserved. This document is Cisco Public Information.

Choose from a flexible suite of support services designed to meet your business needs and help you maintain high-quality network performance while controlling operational costs. (See Table 17.)

Table 17. Technical Services Available for Cisco Catalyst 3850 Switches

Technical Services
Cisco SMARTnet Service • Around-the-clock, global access to the Cisco TAC • Unrestricted access to the extensive Cisco.com knowledge base and tools • Next-business-day, 8x5x4, 24x7x4, and 24x7x2 advance hardware replacement and onsite parts replacement and installation available • Ongoing operating system software updates within the licensed feature set • Proactive diagnostics and real-time alerts on Smart Call Home-enabled devices
Cisco Smart Foundation Service • NBD advance hardware replacement as available • Business hours access to SMB TAC (access levels vary by region) • Access to Cisco.com SMB knowledge base • Online technical resources through Smart Foundation Portal • Operating system software bug fixes and patches
Cisco SP Base Service • Around-the-clock, global access to the Cisco TAC • Registered access to Cisco.com • NBD, 8x5x4, 24x7x4, and 24x7x2 advance hardware replacement; return to factory option available[2] • Ongoing operating system software updates[1]
Cisco Focused Technical Support Services • Three levels of premium, high-touch services are available: ◦ Cisco High-Touch Operations Management Service ◦ Cisco High-Touch Technical Support Service ◦ Cisco High-Touch Engineering Service • Valid Cisco SMARTnet or SP Base contracts on all network equipment are required

Notes:

[1] Cisco operating system updates include the following: maintenance releases, minor updates, and major updates within the licensed feature set.

[2] Advance hardware replacement is available in various service-level combinations. For example, 8x5xNBD indicates that shipment will be initiated during the standard 8-hour business day, 5 days a week (the generally accepted business days within the relevant region), with NBD delivery. Where NBD is not available, same day ship is provided. Restrictions apply; for details, review the appropriate service descriptions.

Ordering Information

Table 18 lists ordering information for the Cisco Catalyst 3850 Series. To place an order, visit the Cisco Ordering homepage at http://www.cisco.com/en/US/ordering/or13/or8/order_customer_help_how_to_order_listing.html.

Table 18. Cisco Catalyst 3850 Series Ordering Information

Product Number	Product Description
Cisco Catalyst 3850 Series	
WS-C3850-24T-L	Stackable 24 10/100/1000 Ethernet ports, with 350WAC power supply 1 RU, LAN Base feature set (StackPower cables need to be purchased separately)
WS-C3850-48T-L	Stackable 48 10/100/1000 Ethernet ports, with 350WAC power supply 1 RU, LAN Base feature set (StackPower cables need to be purchased separately)
WS-C3850-24P-L	Stackable 24 10/100/1000 Ethernet PoE+ ports, with 715WAC power supply 1 RU, LAN Base feature set (StackPower cables need to be purchased separately)
WS-C3850-24U-L	Stackable 24 10/100/1000 Ethernet UPOE ports, with 1100WAC power supply 1 RU, LAN Base feature set (StackPower cables need to be purchased separately)

© 2017 Cisco and/or its affiliates. All rights reserved. This document is Cisco Public Information.

Product Number	Product Description
WS-C3850-48P-L	Stackable 48 10/100/1000 Ethernet PoE+ ports, with 715WAC power supply 1 RU, LAN Base feature set (StackPower cables need to be purchased separately)
WS-C3850-48F-L	Stackable 48 10/100/1000 Ethernet PoE+ ports, with 1100WAC power supply 1 RU, LAN Base feature set (StackPower cables need to be purchased separately)
WS-C3850-48U-L	Stackable 48 10/100/1000 Ethernet UPOE ports, with 1100WAC power supply 1 RU, LAN Base feature set (StackPower cables need to be purchased separately)
WS-C3850-24T-S	Stackable 24 10/100/1000 Ethernet ports, with 350WAC power supply 1 RU, IP Base feature set
WS-C3850-48T-S	Stackable 48 10/100/1000 Ethernet ports, with 350WAC power supply 1 RU, IP Base feature set
WS-C3850-24P-S	Stackable 24 10/100/1000 Ethernet PoE+ ports, with 715WAC power supply 1 RU, IP Base feature set
WS-C3850-24U-S	Stackable 24 10/100/1000 Ethernet UPOE ports, with 1100WAC power supply 1 RU, IP Base feature set
WS-C3850-48P-S	Stackable 48 10/100/1000 Ethernet PoE+ ports, with 715WAC power supply 1 RU, IP Base feature set
WS-C3850-48F-S	Stackable 48 10/100/1000 Ethernet PoE+ ports, with 1100WAC power supply 1 RU, IP Base feature set
WS-C3850-48U-S	Stackable 48 10/100/1000 Ethernet UPOE ports, with 1100WAC power supply 1 RU, IP Base feature set
WS-C3850-24T-E	Stackable 24 10/100/1000 Ethernet ports, with 350WAC power supply 1 RU, IP Services feature set
WS-C3850-48T-E	Stackable 48 10/100/1000 Ethernet ports, with 350WAC power supply 1 RU, IP Services feature set
WS-C3850-24P-E	Stackable 24 10/100/1000 Ethernet PoE+ ports, with 715WAC power supply 1 RU, IP Services feature set
WS-C3850-24U-E	Stackable 24 10/100/1000 Ethernet UPOE ports, with 1100WAC power supply 1 RU, IP Services feature set
WS-C3850-48P-E	Stackable 48 10/100/1000 Ethernet PoE+ ports, with 715WAC power supply 1 RU, IP Services feature set
WS-C3850-48F-E	Stackable 48 10/100/1000 Ethernet PoE+ ports, with 1100WAC power supply 1 RU, IP Services feature set
WS-C3850-48U-E	Stackable 48 10/100/1000 Ethernet UPOE ports, with 1100WAC power supply 1 RU, IP Services feature set
WS-C3850-12X48U-L	Stackable 48 10/100/1000 with 12 100Mbps/1/2.5/5/10 Gbps UPOE Ethernet ports, with 1100W AC power supply 1RU, LAN Base feature set
WS-C3850-12X48U-S	Stackable 48 10/100/1000 with 12 100Mbps/1/2.5/5/10 Gbps UPOE Ethernet ports, with 1100W AC power supply 1RU, IP Base feature set
WS-C3850-12X48U-E	Stackable 48 10/100/1000 with 12 100Mbps/1/2.5/5/10 Gbps UPOE Ethernet ports, with 1100W AC power supply 1RU, IP Services feature set
WS-C3850-24XU-L	Stackable 24 100Mbps/1/2.5/5/10 Gbps UPOE Ethernet ports, with 1100W AC power supply 1RU, LAN Base feature set
WS-C3850-24XU-S	Stackable 24 100Mbps/1/2.5/5/10 Gbps UPOE Ethernet ports, with 1100W AC power supply 1RU, IP Base feature set
WS-C3850-24XU-E	Stackable 24 100Mbps/1/2.5/5/10 Gbps UPOE Ethernet ports, with 1100W AC power supply 1RU, IP Services feature set
WS-C3850-12S-S	Stackable 12 SFP Ethernet ports, with 350WAC power supply 1 RU, IP Base feature set

© 2017 Cisco and/or its affiliates. All rights reserved. This document is Cisco Public Information.

Product Number	Product Description
WS-C3850-12S-E	Stackable 12 SFP Ethernet ports, with 350WAC power supply 1 RU, IP Services feature set
WS-C3850-24S-S	Stackable 24 SFP Ethernet ports, with 350WAC power supply 1 RU, IP Base feature set
WS-C3850-24S-E	Stackable 24 SFP Ethernet ports, with 350WAC power supply 1 RU, IP Services feature set
WS-C3850-12XS-S	Stackable 12 SFP+ Ethernet ports, with 350WAC power supply 1 RU, IP Base feature set
WS-C3850-12XS-E	Stackable 12 SFP+ Ethernet ports, with 350WAC power supply 1 RU, IP Services feature set
WS-C3850-24XS-S	Stackable 24 SFP+ Ethernet ports, with 715WAC power supply 1 RU, IP Base feature set
WS-C3850-24XS-E	Stackable 24 SFP+ Ethernet ports, with 715WAC power supply 1 RU, IP Services feature set
WS-C3850-48XS-S	Standalone, 48 SFP+ and 4 QSFP+ Ethernet ports, with 750WAC front-to-back power supply 1 RU, IP Base feature set
WS-C3850-48XS-E	Standalone, 48 SFP+ and 4 QSFP+ Ethernet ports, with 750WAC front-to-back power supply 1 RU, IP Services feature set
WS-C3850-48XS-F-S	Standalone, 48 SFP+ and 4 QSFP+ Ethernet ports, with 750WAC back-to-front power supply 1 RU, IP Base feature set
WS-C3850-48XS-F-E	Standalone, 48 SFP+ and 4 QSFP+ Ethernet ports, with 750WAC back-to-front power supply 1 RU, IP Services feature set
Cisco Catalyst 3850 Bundles	
WS-C3850-24PW-S	Cisco Catalyst 3850 24-port PoE IP Base with 5 access point license
WS-C3850-48PW-S	Cisco Catalyst 3850 48-port PoE IP Base with 5 access point license
WS-C3850-24UW-S	Cisco Catalyst 3850 24 Port UPOE with 5 access point licenses IP Base
WS-C3850-48W-S	Cisco Catalyst 3850 48 Port PoE with 5 access point licenses IP Base
WS-C3850-48UW-S	Cisco Catalyst 3850 48 Port UPOE with 5 access point licenses IP Base
WS-C3850-24XUW-S	Cisco Catalyst 3850 24 Port UPOE with 24 100Mbps/1/2.5/5/10 Gbps and 5 access point licenses IP Base
WS-C3850-12X48UW-S	Cisco Catalyst 3850 48 Port UPOE with 12 100Mbps/1/2.5/5/10 Gbps and 5 access point licenses IP Base
WS-C3850-16XS-S	Cisco Catalyst 3850 12 SFP+ port stackable model, with C3850-NM-4-10G module and 350WAC power supply. 1 RU, IP Base feature set
WS-C3850-16XS-E	Cisco Catalyst 3850 12 SFP+ port stackable model, with C3850-NM-4-10G module and 350WAC power supply. 1 RU, IP Services feature set
WS-C3850-32XS-S	Cisco Catalyst 3850 24 SFP+ port stackable model, with C3850-NM-8-10G module and 715WAC power supply. 1 RU, IP Base feature set
WS-C3850-32XS-E	Cisco Catalyst 3850 24 SFP+ port stackable model, with C3850-NM-8-10G module and 715WAC power supply. 1 RU, IP Services feature set
Network Modules for the Cisco Catalyst 3850 Series	
C3850-NM-4-1G=	4 x Gigabit Ethernet network module spare
C3850-NM-2-10G=	4 x Gigabit Ethernet/2 x 10 Gigabit Ethernet network module spare
C3850-NM-BLANK=	Network module blank spare
C3850-NM-4-10G=	4 x Gigabit Ethernet/4 x 10 Gigabit Ethernet network module spare
C3850-NM-8-10G=	8 x Gigabit Ethernet/8 x 10 Gigabit Ethernet network module spare
C3850-NM-2-40G=	2 x 40 Gigabit Ethernet network module spare
Software Licenses	
C3850-12-S-E	Cisco Catalyst 3850 12-port IP Base to IP Services RTU paper license
C3850-24-L-S	Cisco Catalyst 3850 24-port Switch LAN Base to IP Base RTU paper license

© 2017 Cisco and/or its affiliates. All rights reserved. This document is Cisco Public Information.

Product Number	Product Description
C3850-48-L-S	Cisco Catalyst 3850 48-port Switch LAN Base to IP Base RTU paper license
C3850-24-L-E	Cisco Catalyst 3850 24-port LAN Base to IP Services RTU paper license
C3850-48-L-E	Cisco Catalyst 3850 48-port LAN Base to IP Services RTU paper license
C3850-24-S-E	Cisco Catalyst 3850 24-port IP Base to IP Services RTU paper license
C3850-48-S-E	Cisco Catalyst 3850 48-port IP Base to IP Services RTU paper license
L-C3850-24-L-S	Cisco Catalyst 3850 24-port LAN Base to IP Base RTU electronic license
L-C3850-48-L-S	Cisco Catalyst 3850 48-port LAN Base to IP Base RTU electronic license
L-C3850-24-L-E	Cisco Catalyst 3850 24-port LAN Base to IP Services RTU electronic license
L-C3850-48-L-E	Cisco Catalyst 3850 48-port LAN Base to IP Services RTU electronic license
L-C3850-24-S-E	Cisco Catalyst 3850 24-port IP Base to IP Services RTU electronic license
L-C3850-48-S-E	Cisco Catalyst 3850 48-port IP Base to IP Services RTU electronic license
L-C3850-12-S-E	Cisco Catalyst 3850 12-port IP Base to IP Services RTU electronic license
Access Point Licenses	
L-LIC-CT3850-UPG	Primary upgrade license SKU for Cisco 3850 wireless controller (e-delivery)
L-LIC-CTIOS-1A	1 access point adder license for Cisco IOS Software based wireless controller (e-delivery)
LIC-CT3850-UPG	Primary upgrade license SKU for Cisco 3850 wireless controller (paper license)
LIC-CTIOS-1A	1 access point adder license for the Cisco IOS Software based wireless controller (paper license)
Power Supplies and Fan for the Cisco Catalyst 3850 Series	
PWR-C1-350WAC=	350WAC power supply spare
PWR-C1-715WAC=	715WAC power supply spare
PWR-C1-1100WAC=	1100WAC power supply spare
PWR-C1-440WDC=	440WDC power supply spare
PWR-C1-BLANK=	Power supply blank spare
PWR-C3-750WAC-R=	750WAC power supply spare front-to-back airflow for 48XS
PWR-C3-750WAC-F=	750WAC power supply spare back-to-front airflow for 48XS
PWR-C3-750WDC-R=	750WDC power supply spare front-to-back airflow for 48XS
PWR-C3-750WDC-F=	750WDC power supply spare back-to-front airflow for 48XS
FAN-T3-R=	Fan module spare front-to-back airflow for 48XS
FAN-T3-F=	Fan module spare back-to-front airflow for 48XS
C3850-FAN-T1=	Cisco Catalyst 3850 and WLC 5760 Type 1 Fan Module
StackWise-480 and StackPower Cables for the Cisco Catalyst 3850 Series	
STACK-T1-50CM=	Cisco StackWise-480 50cm stacking cable spare
STACK-T1-1M=	Cisco StackWise-480 1m stacking cable spare
STACK-T1-3M=	Cisco StackWise-480 3m stacking cable spare
CAB-SPWR-30CM=	Cisco Catalyst 3850 StackPower cable 30cm spare
CAB-SPWR-150CM=	Cisco Catalyst 3850 StackPower cable 150cm spare
Spare Power Cords for the Cisco Catalyst 3850 Series	
CAB-TA-NA=	AC power cord for Cisco Catalyst 3850 (North America)
CAB-TA-AP=	AC power cord for Cisco Catalyst 3850 (Australia)
CAB-TA-AR=	AC power cord for Cisco Catalyst 3850 (Argentina)
CAB-TA-SW=	AC power cord for Cisco Catalyst 3850 (Switzerland)
CAB-TA-UK=	AC power cord for Cisco Catalyst 3850 (United Kingdom)
CAB-TA-JP=	AC power cord for Cisco Catalyst 3850 (Japan)
CAB-TA-250VAC-JP=	Japan 250VAC power cord for Cisco Catalyst 3850 (Japan)

© 2017 Cisco and/or its affiliates. All rights reserved. This document is Cisco Public Information.

Product Number	Product Description
CAB-TA-EU=	AC power cord for Cisco Catalyst 3850 (Europe)
CAB-TA-IT=	AC power cord for Cisco Catalyst 3850 (Italy)
CAB-TA-IN=	AC power cord for Cisco Catalyst 3850 (India)
CAB-TA-CN=	AC power cord for Cisco Catalyst 3850 (China)
CAB-TA-DN=	AC power cord for Cisco Catalyst 3850 (Denmark)
CAB-TA-IS=	AC power cord for Cisco Catalyst 3850 (Israel)
CAB-ACBZ-12A=	AC power cord for Cisco Catalyst 3850 (Brazil), 12A/125V BR-3-20 plug up to 12A
CAB-ACBZ-10A=	AC power cord for Cisco Catalyst 3850 (Brazil), 10A/250V BR-3-10 plug up to 10A
CAB-C15-CBN	Cabinet jumper power cord, 250 VAC 13A, C14-C15 connectors
Spare Accessory and Rack Mount Kits for the Cisco Catalyst 3850 Series	
C3850-ACC-KIT=	Accessory kit for Cisco Catalyst 3850 Series
C3850-RAC-KIT=	Rack mount kit for Cisco Catalyst 3850 Series
C3850-4PT-KIT=	Extension rails and brackets for four-point mounting for Cisco Catalyst 3850 Series

Optics Compatibility Information

The Cisco Catalyst 3850 Series supports a wide range of optics. Because the list of supported optics is updated on a regular basis, consult the tables available here for the latest QSFP+, SFP+, and SFP compatibility information: http://www.cisco.com/en/US/products/hw/modules/ps5455/products_device_support_tables_list.html.

Cisco Capital

Financing to Help You Achieve Your Objectives

Cisco Capital can help you acquire the technology you need to achieve your objectives and stay competitive. We can help you reduce CapEx. Accelerate your growth. Optimize your investment dollars and ROI. Cisco Capital financing gives you flexibility in acquiring hardware, software, services, and complementary third-party equipment. And there's just one predictable payment. Cisco Capital is available in more than 100 countries. Learn more.

Americas Headquarters
Cisco Systems, Inc.
San Jose, CA

Asia Pacific Headquarters
Cisco Systems (USA) Pte. Ltd.
Singapore

Europe Headquarters
Cisco Systems International BV Amsterdam,
The Netherlands

Cisco has more than 200 offices worldwide. Addresses, phone numbers, and fax numbers are listed on the Cisco Website at www.cisco.com/go/offices.

Cisco and the Cisco logo are trademarks or registered trademarks of Cisco and/or its affiliates in the U.S. and other countries. To view a list of Cisco trademarks, go to this URL: www.cisco.com/go/trademarks. Third party trademarks mentioned are the property of their respective owners. The use of the word partner does not imply a partnership relationship between Cisco and any other company. (1110R)

Printed in USA C78-720918-25 07/17

© 2017 Cisco and/or its affiliates. All rights reserved. This document is Cisco Public Information.